CrocGuard®

Bridge & Culvert Barrier, Spanning up to 16 m



MASH
TL4
Compliant

ramshield.com

Table of Contents

1.0 Introduction 5
2.0 Specifications 5
3.0 Crash Test Performance 6
4.0 Design Considerations 7
4.1 Edge Alignment 7
4.2 Hydraulic load 7
4.3 Advance Grading 7
4.4 Clearance to Hazards 8
4.5 CrocGuard® Beam Length Selection 8
4.6 The RamShield® Transition 9
4.7 End Terminals 11
4.8 Minimum Installation Length 11
4.9 Design Life 12
5.0 Computer Simulation Analysis 13
6.0 Component Identification 14
7.0 Tools Required 15
7.1 Recommended PPE 15
8.0 Site Establishment 16
8.1 Traffic Control 16
8.2 Underground Services 16
8.3 Overhead Obstructions 16
8.4 Unloading Exclusion Zone & Storage 16
9.0 Installation Sequence 18
9.1 Set-Out 18
9.2 Auguring the Abutment Post Holes 18
9.3 Lifting the CrocGuard® Beams 19
9.4 Attaching the Abutment Post 21
9.5 Concreting the Abutment Post 21
9.6 Installing the RamShield® Transition 21

CrocGuard® Inspection Form **27**
10.0 Maintenance **28**
11.0 Repair **28**



Version	Date	Revisions
08	February 2026	Updated format.

Leading Safety

Successfully crash tested to MASH Test Level 3 & Test Level 4

Complies with AS/NZS 3845.1:2015 Road safety barrier systems and devices

Crash tested to Regular Performance Level as defined in AS 5100.1:2017 Bridge Design

Crash tested on the edge of an elevated concrete beam

Superior Design

Spanning up to 16 m between abutment posts

Available in modular lengths of 8 m, 10 m, 12 m, 14 m & 16m

Supplied as a pre-assembled beam

Connects directly to the RamShield® Transition

No attachment to the bridge or culvert structure

No additional hydraulic load on bridges during floodwater events

Minimises potential for debris entrapment during overtopping floodwater

Maximises usable bridge & culvert width reducing centre line crowding

Eliminates the requirement for ground beam when spanning underground services

Durability

Highly resilient to nuisance impacts

Minimal maintenance

Hot dip galvanised thrie-beam guardrails encasing a concrete core

1.0 Introduction

Developed by Safe Direction, CrocGuard® is a revolutionary barrier system spanning up to 16 m between abutment posts. Featuring a unique composite design comprising external thrie-beam rails that encases a concrete core, the system transfers impact loads to the posts at each abutment. The stiffness of CrocGuard® limits dynamic deflection and minimises damage to the barrier following nuisance impacts.

CrocGuard® is available in modular lengths of 8 m, 10 m, 12 m, 14 m and 16 m providing a tailored solution for various applications including:

- Weak bridge decks such as timber deck bridges that have insufficient structural capacity to withstand vehicle impact loads from a conventional post and rail barrier.
- Culvert applications where there is insufficient fill height to support posts or a strip footing for conventional post and rail barrier.
- Concern for horizontal hydraulic loads experienced by the bridge or culvert during flood events.
- Narrow bridges or culverts in need of maximising lane widths.
- Areas where underground services or obstructions prevent the installation of a strip footing for a conventional post and rail barrier.

CrocGuard® is compatible with the MASH TL3 RamShield® Transition providing connection to RamShield® High Containment, RamShield® W-Beam, RamShield® Low Deflection or the MSKT Terminal providing a fully MASH compliant barrier system.

CrocGuard® is a patented system designed, crash test validated, manufactured and supplied by Safe Direction, a proud Australian owned manufacturing company.

2.0 Specifications

Crash Test Compliance	MASH Test Level 3 & Test Level 4 AS 5100.1 Regular Performance Level
System Width	280 mm
System Height	1000 mm
Maximum Span	16 m
Abutment Post Section	250 x 250 x 9.0 mm
Abutment Post Length	2150 mm
Abutment Post Footing	1800 mm deep x 600 mm diameter
System Mass (Beam Only)	280 kg per metre
System Finish	Hot dip galvanised in accordance with AS/NZS 4680

3.0 Crash Test Performance

CrocGuard® has been fully crash tested and evaluated according to the specifications for Test Level 3 (TL3) and Test Level 4 (TL4) of the AASHTO Manual for Assessing Safety Hardware (MASH). The MASH specification is an update to and supersedes NCHRP Report 350 for the purposes of evaluating new safety hardware devices.

MASH is also the basis of testing procedures for road safety systems as stated in *AS/NZS 3845.1: 2015 Road Safety Barrier System and Devices.*

The introduction of MASH follows changes to the vehicle fleet, researching of real-life impact conditions and updated criteria for evaluating barrier performance.

CrocGuard® has been assessed as a longitudinal barrier, designed to contain, redirect, and shield vehicles from roadside obstacles. The MASH TL4 crash test matrix for a longitudinal barrier requires the following impacts:

- 1100 kg passenger car travelling at 100 km/h and 25 degrees (75.8 kJ).
- 2270 kg pick-up travelling at 100 km/h and 25 degrees (156.4 kJ).
- 10,000 kg rigid truck travelling at 90 km/h and 15 degrees (209.3 kJ)

A concrete bridge deck was formed for the crash testing. The top of the bridge deck was level with the ground and the area behind the deck was excavated to represent an elevated deck, thoroughly assessing wheel interaction with the edge of the deck.

Crash testing was undertaken using a maximum CrocGuard® beam length of 16 m. In addition, all impacts were performed mid-span representing the largest system dynamic deflection, creating the greatest potential for vehicle underride, vehicle vaulting, system failure, and wheel snag as the CrocGuard® beam deflects beyond the edge of the bridge deck.

Table 1: CrocGuard® Crash Test Results.

Impact Condition	CrocGuard® Span	Impact Location	Dynamic Deflection
1100 kg passenger car, 100 km/h and 25 degrees	16 m	Mid-span	0.54 m
2270 kg pick-up truck, 100 km/h and 25 degrees	16 m	Mid-span	0.82 m
10,000 kg rigid truck, 90 km/h and 15 degrees	16 m	Mid-span	0.90 m

Crash testing performed with the 1100 kg passenger car at 100 km/h resulted in nil damage to the CrocGuard® beam which was reused for further crash testing. This impact performance demonstrates the robust design of CrocGuard® and its ability to withstand nuisance impacts.

4.0 Design Considerations

4.1 Edge Alignment

CrocGuard® beams up to and including 14 m between abutment posts may be installed with the traffic face of the beam aligned with the edge of the bridge or culvert deck.

CrocGuard® beams of 16 m between abutment posts must have a minimum 100 mm encroachment, measured from the edge of the deck to the traffic face of the beam. Refer to Figure 1.

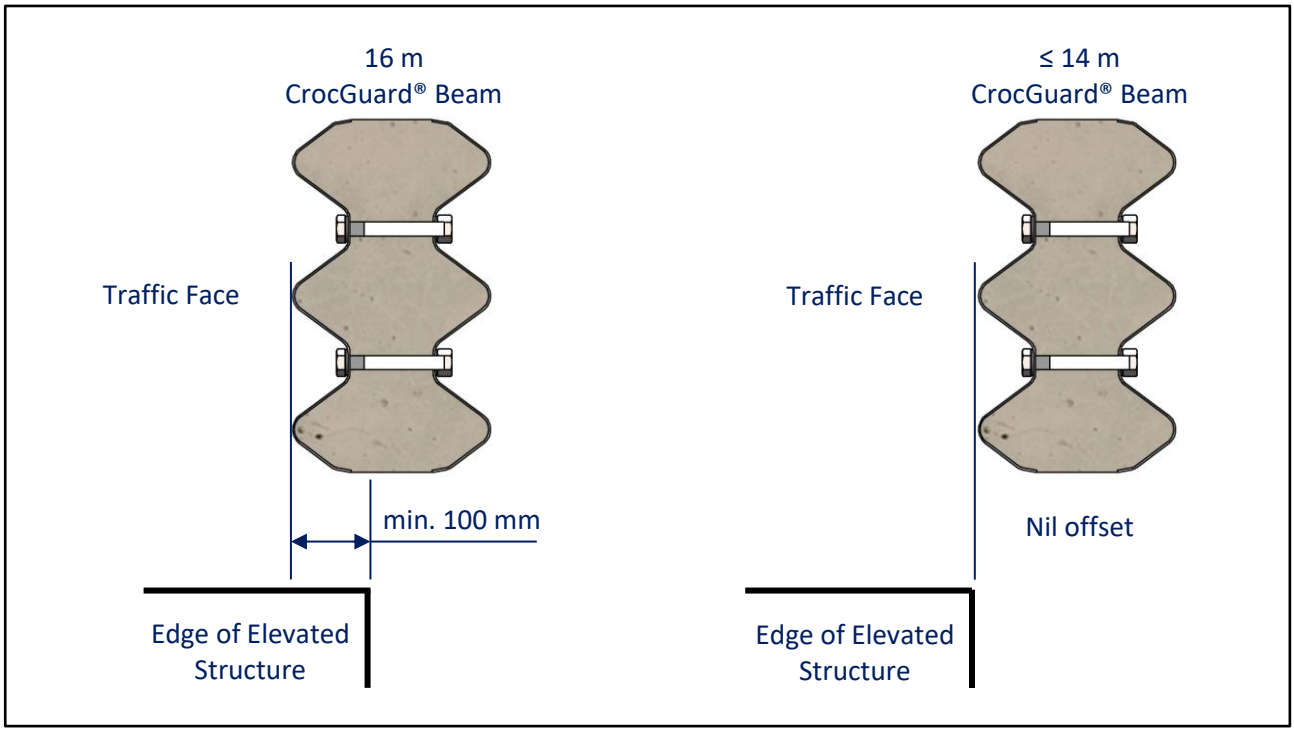

Figure 1: CrocGuard® Edge Alignment.

4.2 Hydraulic load

CrocGuard® effectively eliminates the often-destructive hydraulic load applied to bridges and culverts from conventional post and rail barriers during overtopping from flood waters.

The clear space beneath the CrocGuard® barrier facilitates overflows, reducing maintenance costs and providing greater surety to the life expectancy of bridges and culverts.

4.3 Advance Grading

It is recommended that the area in advance of CrocGuard® be limited to a grading of 10H:1V to ensure that the vehicle's suspension is neither extended nor compressed at the moment of impact with the barrier.

4.4 Clearance to Hazards

CrocGuard® may be specified at roadside locations where underground services prevent inground posts or the construction of a ground beam. In these circumstances the system should be installed with sufficient clearance behind the barrier to allow for the expected deflection of the system.

Dynamic deflection is the maximum lateral displacement of the barrier during a vehicle impact. When a vehicle strikes a barrier, the dynamic deflection varies according to the characteristics of the impacting vehicle, including vehicle mass, impact speed, angle of impact and the characteristics of the barrier system.

The CrocGuard® crash test configuration of a 16 m beam with impacts performed mid-span were selected to achieve maximum dynamic deflection results. Reducing the span of CrocGuard® between abutment posts stiffens the barrier and limits dynamic deflection as shown in Table 2.

Table 2: CrocGuard Dynamic Deflection

CrocGuard® Beam Length	MASH TL3 Dynamic Deflection	Method of Evaluation
16 m	0.82 m	Full-Scale Crash Test
14 m	0.66 m	Interpolation
12 m	0.50 m	Simulation Impact
10 m	0.42 m	Interpolation
8 m	0.33 m	Simulation Impact

4.5 CrocGuard® Beam Length Selection

CrocGuard® is designed to transfer impact loads to the posts at each abutment. In order to ensure the abutment posts are located in sound foundation, it is recommended to select a CrocGuard® beam length that will extend at least 1 m beyond each end of the bridge or culvert structure.



Figure 2: Appropriate CrocGuard® Beam Length.

4.6 The RamShield® Transition

The construction of CrocGuard® comprising thrie-beam panels encasing a concrete core supported by heavy-duty abutment posts is considered a rigid barrier. Wherever a rigid barrier connects to a semi-rigid or flexible guardrail system, the interface must be designed to ensure that the overall system will perform safely when impacted by a design vehicle.

The RamShield® Transition provides a smooth, snag-free connection between RamShield® guardrail barriers and CrocGuard®. The RamShield® Transition gradually increases stiffness of the guardrail barrier system reducing the potential for vehicle pocketing at the CrocGuard® abutment. The RamShield® Transition achieves a controlled redirection of errant vehicles by releasing the thrie-beam guardrail from the post at an optimal load to retain rail height, limit dynamic deflection and to allow the post to collapse without tripping the vehicle.

The RamShield® Transition features thrie-beam guardrail positioned 1000 mm above road level providing compatibility with the CrocGuard® installation height. The thrie beam panel of the RamShield® Transition is spliced directly to the CrocGuard® beam.

The use of an asymmetric transition is required to connect to w-beam guardrail. The asymmetric transition lowers the height to top of the thrie-beam rail within the RamShield® Transition by 200 mm, making it compatible for use with RamShield® W-Beam guardrail and MASH compliant end terminals, which are installed with a rail height of 800 mm above ground level.

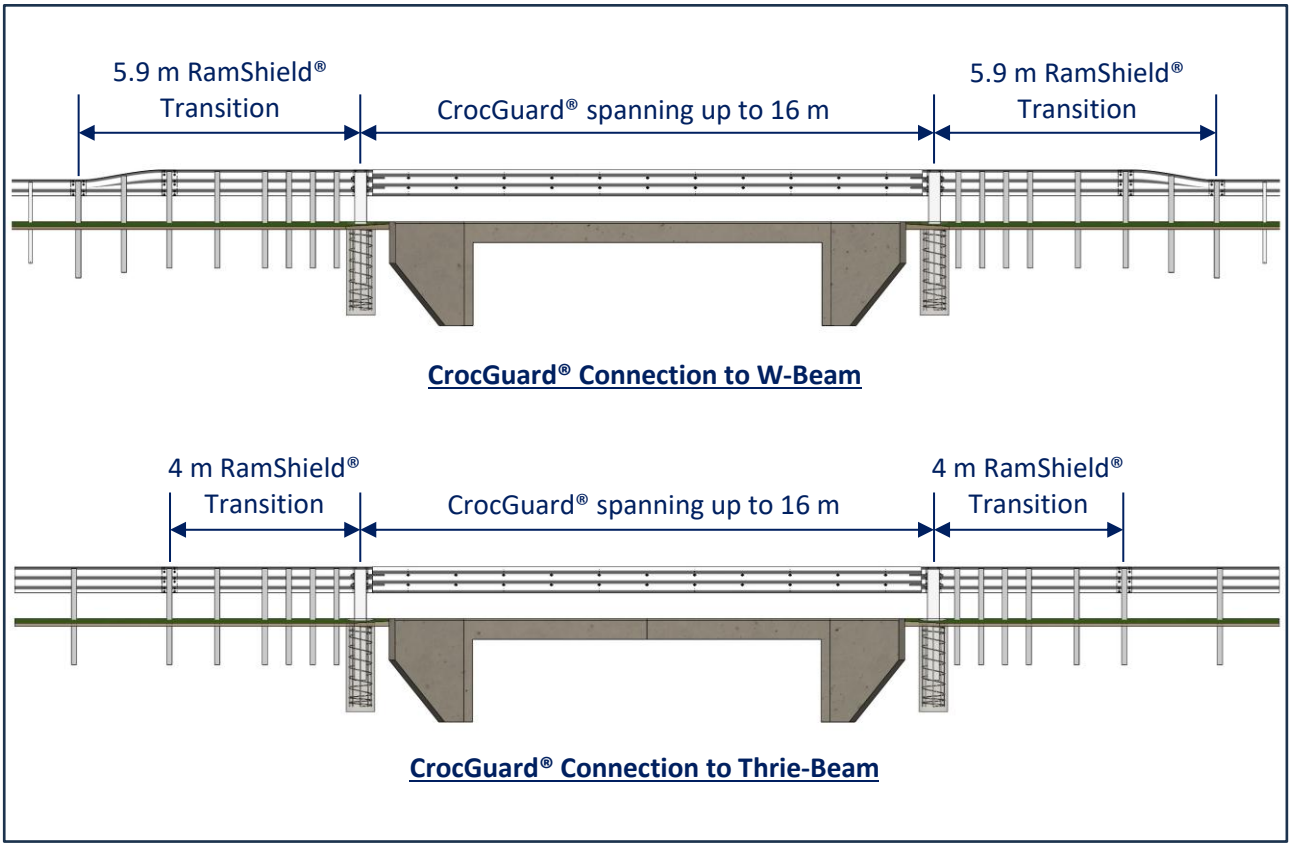

Figure 3: RamShield® Transition Configurations.



Figure 4: RamShield® Transition – Front View.



Figure 5: RamShield® Transition – Rear View.

4.7 End Terminals

Guardrail end terminals are designed to anchor the safety barrier system and introduce the necessary tensile and flexural strength required for safe vehicle containment and re-direction throughout the length of-need section. They also provide the additional feature of reducing the severity of an impact near or at the end of the system.

Guardrail end terminals are installed using w-beam guardrail, therefore it is necessary to transition from thrie-beam using an asymmetric transition before commencing installation of the end terminal.

The Safe Direction MASH compliant MSKT and MAX-Tension guardrail end terminals may be connected directly to the asymmetric transition of the RamShield® Transition.



Figure 6: MSKT Guardrail Terminal

4.8 Minimum Installation Length

It is recommended, where space permits, to install continuous safety barrier rather than designing a barrier to shield a specific hazard. A continuous safety barrier aims to protect the entire roadside and prevent head-on collisions.

At sites where continuous barrier is not achievable, a shorter length barrier may be installed. The minimum installation length measured from each CrocGuard® abutment post is shown in Table 3.

Table 3: Minimum Installation Lengths.

Design Speed	End Terminal	RamShield® Transition Length	Minimum Barrier Length (measured from the abutment post)
≤ 70 km/h	9.5 m TL2 MSKT	5.9 m	15.4 m
> 70 km/h	14.3 m TL3 MSKT	5.9 m	20.2 m

4.9 Design Life

The durability of the finished hot dip galvanized coating is a function of the environment to which the article is exposed. According to industry standards, hot-dip galvanized coatings can last up to 50 years in rural environments and up to 25 years in more corrosive environments, such as coastal regions. These estimates are based on average environmental conditions, and the actual lifespan of a galvanized coating will depend on the specific conditions it is exposed to.

Example: The CrocGuard® abutment post has a thickness of 9 mm. Hot dip galvanising will provide a minimum average coating thickness of 80 µm. When installed in a C3 environment, the coating will provide approximately 40 years until first maintenance.

Table 4: Coating Thicknesses, AS/NZS 4680

Article Thickness, mm	Average Coating Thickness, µm	Average Coating Mass, g/m²
≤ 1.5	45	320
> 1.5 ≤ 3	55	390
> 3 ≤ 6	70	500
> 6	80	600

Table 5: Corrosivity Classifications, AS 4312

Corrosivity Category	
CX	Severe Surf Shoreline
C5	Surf Seashore
C4	Calm Seashore
C3	Coastal
C2	Arid/Urban Inland
C1	Dry Indoors

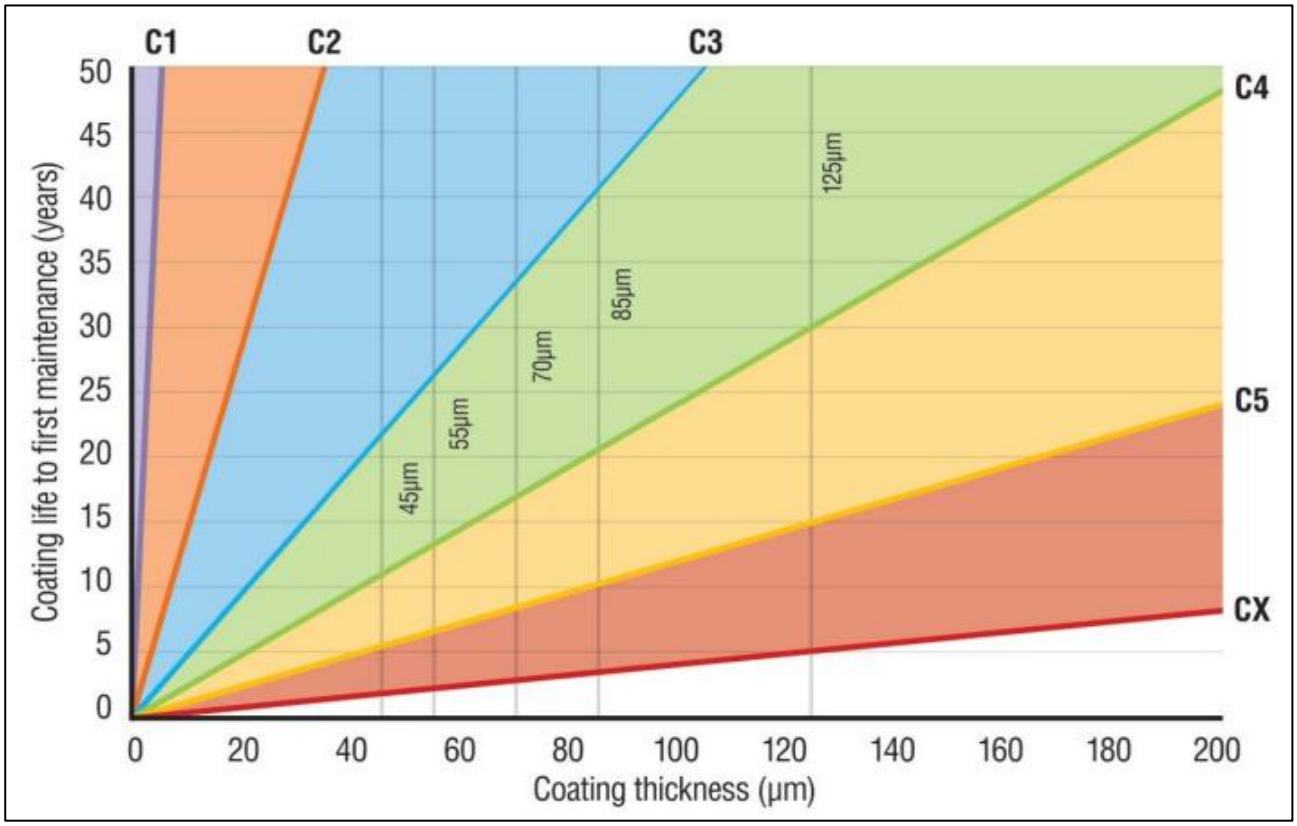

Figure 7: Calculated Corrosivity Rates for Hot Dip Galvanised Coatings, AS/NZS 2312.2.

5.0 Computer Simulation Analysis

Computer simulation analysis, also known as finite element analysis, has become an important tool in the development and assessment of crash barrier systems. Recent advances in computer hardware and finite element methodologies have given developers of crash barriers the ability to investigate complex dynamic problems involving vehicular impacts into safety barrier systems. Finite element analysis has been used extensively to evaluate both vehicle components and the crashworthiness of safety barriers and hardware.

Most computer simulation models use the LS-DYNA finite element code. LS-DYNA is a general-purpose, explicit finite element code and is widely used to solve nonlinear, dynamic response of three-dimensional problems and is capable of capturing complex interactions and dynamic load-time history responses that occur when a vehicle impacts a barrier system.

The full-scale crash test results of CrocGuard® have been numerically validated and verified in accordance with NCHRP Report 179 as required by the Austroads Safety Barrier Assessment Panel (ASBAP).

The CrocGuard® simulation model has been used by Safe Direction to evaluate incremental improvements including:

- Dynamic deflections at various impact speeds and impact angles.
- Dynamic deflections on shorter length CrocGuard® beams.
- Performance of the abutment post footings in varying soil types and formation geometries.

Computer simulation analysis is not used to substitute compliance crash testing, however it has become a useful tool to assist designers and understand the impact performance of non-standard installation configurations.

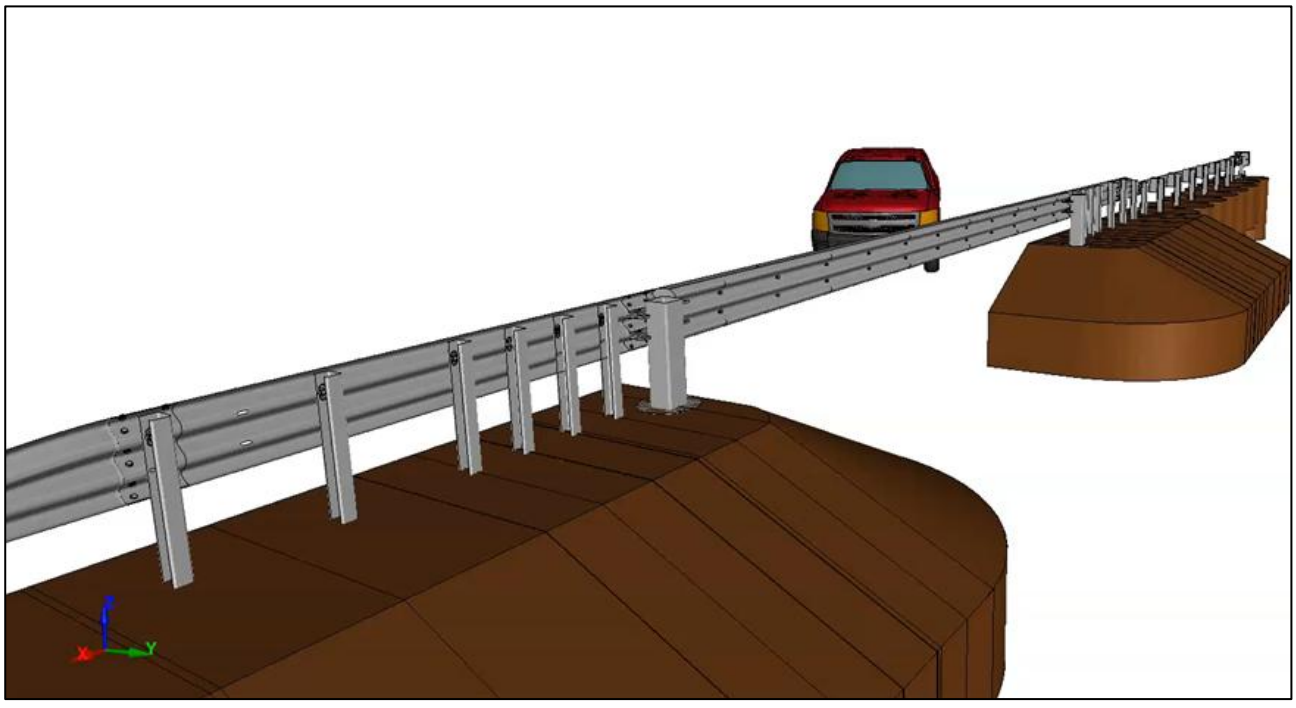

Figure 8: CrocGuard® Simulation Analysis.

6.0 Component Identification (not to scale)

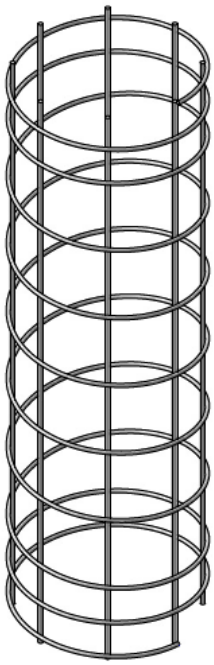

Abutment Post Reo Cage
(490 mm Ø x 1600 mm long)
11 kg

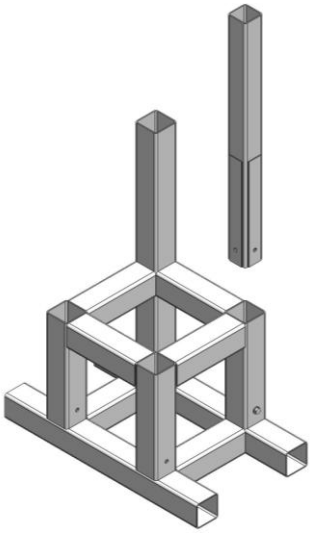

Installation Support Frame
(SWL 5 tonnes)
16 kg



M36 x 100 mm
Bolt/Nut/Washer

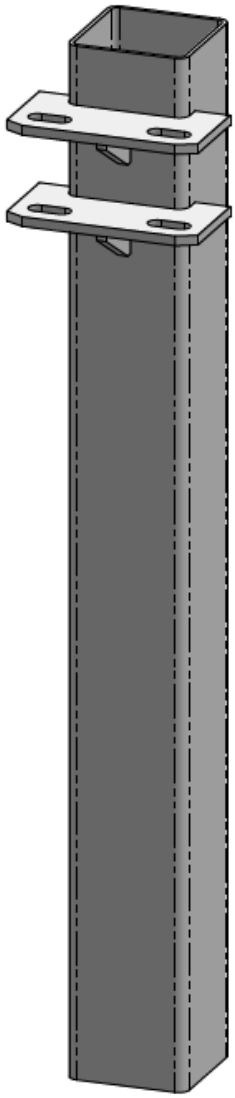

2150 mm Abutment Post
150 kg

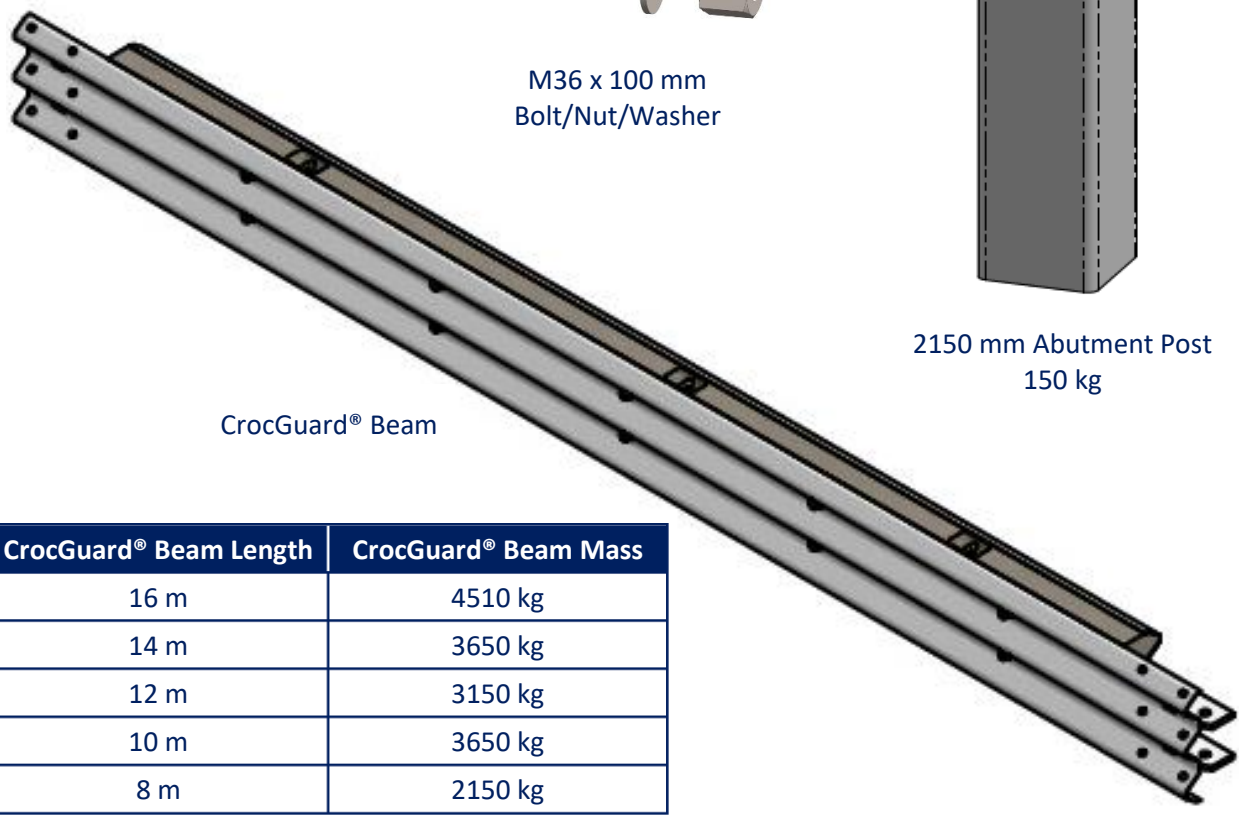

CrocGuard® Beam

CrocGuard® Beam Length	CrocGuard® Beam Mass
16 m	4510 kg
14 m	3650 kg
12 m	3150 kg
10 m	3650 kg
8 m	2150 kg

7.0 Tools Required

Tools required for the installation of CrocGuard® includes:

- Crane to suit CrocGuard® beam mass.
- 600 mm diameter auger.
- Combination spanner to suit M36 bolts (2 off).
- Pneumatic drill driver with 32 mm attachment.
- String line.
- Tape measure.
- Plate clamp.
- Metal snips.
- Concrete trowel.
- Sledge hammer.
- Shovel.
- 12 mm diameter pinch bar.
- Slings or chains.

7.1 Recommended PPE

It is recommended that the following personal protective equipment (PPE) be provided for the safe installation of CrocGuard®:

- Safety footwear.
- Hard hat.
- Gloves.
- Hearing protection.
- High visibility clothing.
- PPE as required for the use of an auger.



8.0 Site Establishment

8.1 Traffic Control

Prior to the commencement of any work, the site should be evaluated for risks to workers, pedestrians and other road users. The establishment of traffic control should provide safe travel for passing vehicles and/or pedestrians and appropriately protect workers near the roadside. Installation of CrocGuard® will require a minimum single lane closure for installation. Depending on the lifting crane/apparatus deployed a two-lane bridge can be kept open during installation as a trafficcontrolled single lane operation.

8.2 Underground Services

The installation of the CrocGuard® abutment posts requires auguring. Prior to any excavation an investigation for potential underground hazards is recommended.

8.3 Overhead Obstructions

The site should be evaluated for potential overhead instructions that may present a risk during the installation process. These obstructions typically include power lines, signage or trees. Required clearance heights for crane lifts should be known prior to undertaking this evaluation.

8.4 Unloading Exclusion Zone & Storage

Only appropriate load-rated slings and chains should be used for the safe unloading of product. Refer to Section 9.3). It is recommended that an exclusion zone be maintained around the unloading process. This provides distance between moving machinery and workers in the event that goods or the machinery move unexpectedly.

Unloading and the storing of the product on a level surface is recommended. The transport frames used to ship the CrocGuard® beams to site can be used for a safe stable means to store the CrocGuard® beams on site as shown in Figure 9

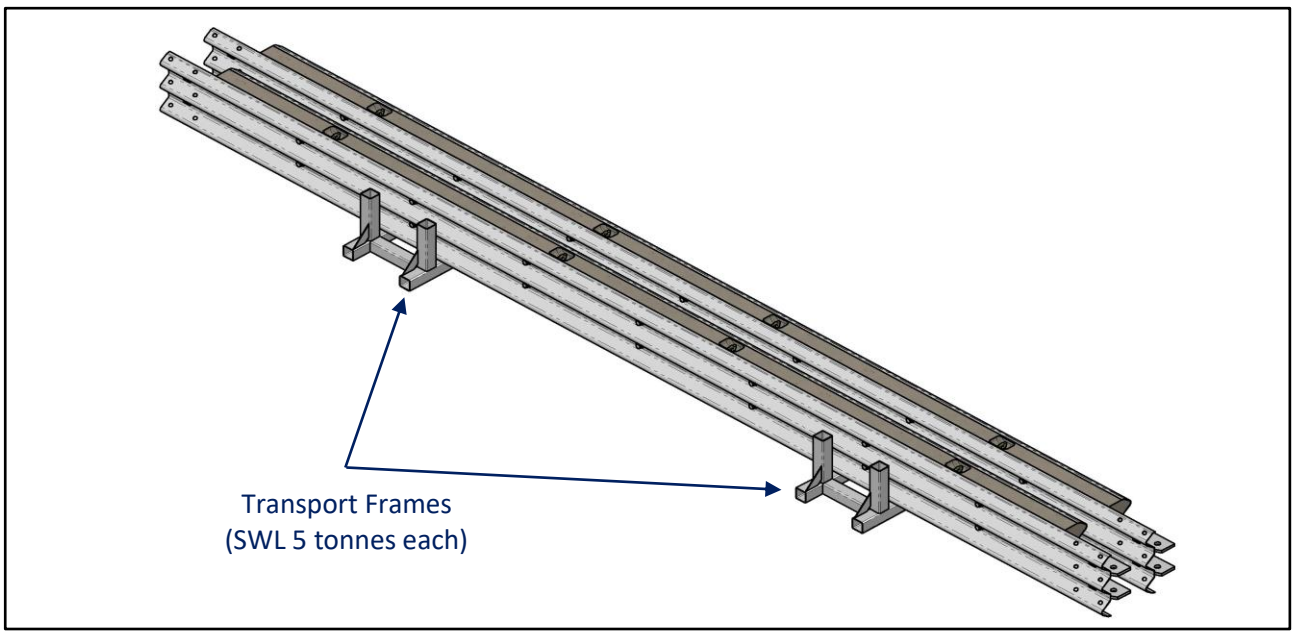

Figure 9: Onsite Storing of CrocGuard® Beams.

Notes –

1. **Pre-use inspection** - Transport Frames should be inspected prior use. Frames must not be used if there is any damage to the structural elements or welds. The frames must also not be used if there is any distortion to their shape – All SHS Sections are fabricated to an orthogonal construction (90 degrees to adjacent members).
2. Each CrocGuard beam is to be supported by minimum two (2) Transport Frames.
3. Safe Working Load (SWT) of 5t at each slot or 10t for two slots.
4. 8m CrocGuard beam shown for reference only.

REVISIONS

REV.	ZONE	DESCRIPTION	DATE	APPV'D
A		Initial Issue	01/07/2024	HW

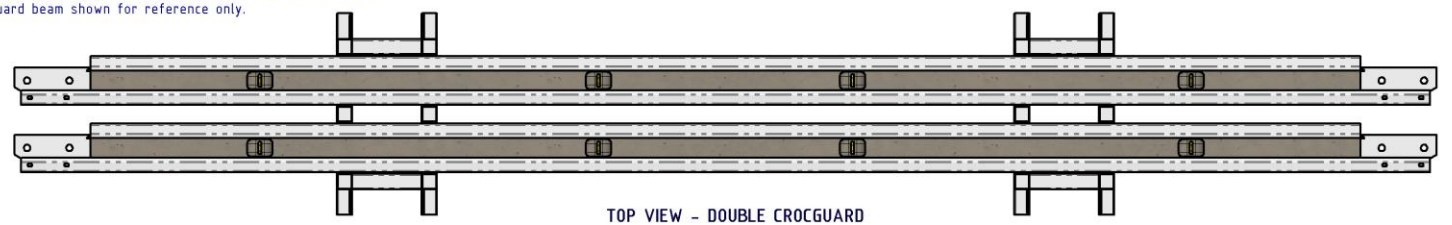

TOP VIEW – DOUBLE CROCGUARD

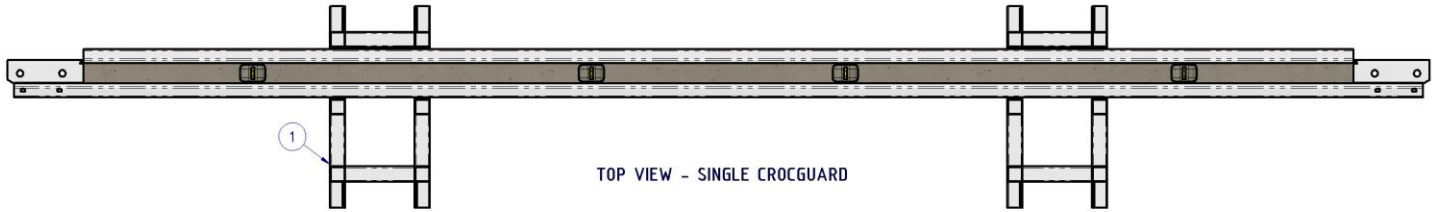

TOP VIEW – SINGLE CROCGUARD

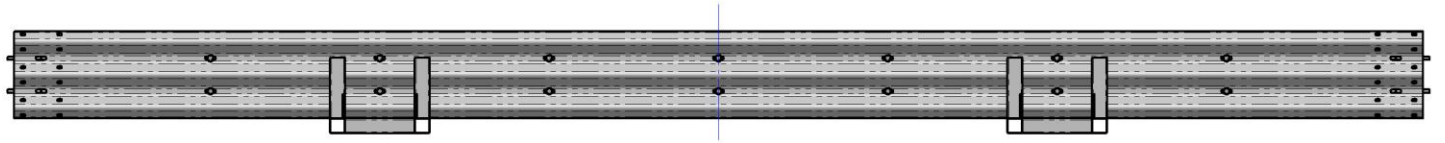

FRONT VIEW

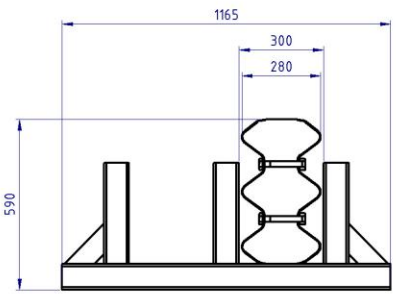

VIEW A

SINGLE CROCGUARD

SCALE 1:15

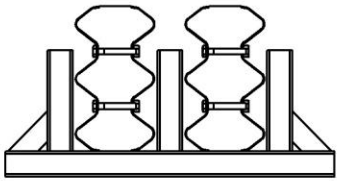

VIEW B

DOUBLE CROCGUARD

SCALE 1:15

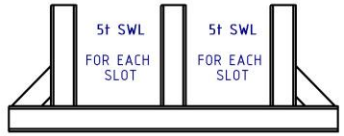

TRANSPORT FRAME (SWL)

BOM Table – CrocGuard® Transport Frame Guidelines Default

ITEM NO.	QTY	PART NUMBER	DESCRIPTION	Configuration Name	Weight kg EA
1	2	SD-MIS-0022-01	Transport Frame	Default	50

MATERIAL:

FINISH:

SafeDirection CRASH BARRIER SOLUTIONS

COPYRIGHT All rights reserved ABN 53 156 459 684
These drawings, plans and specifications and the copyright therein are the properties of **Safe Direction Pty Ltd** and must not be used, reproduced or copied wholly or in part without written permission.

UNLESS OTHERWISE SPECIFIED: GENERAL TOLERANCES: ±0.5mm ALL DIMENSIONS ARE IN mm

THIRD ANGLE PROJECTION

STATUS	NAME	DATE
DRAWN	W. Refahi	1/07/2024
CHK'D	T. Colquhoun	01/07/2024
APPV'D	H. Wallace	01/07/2024

STATUS: **APPROVED**

PROJECT:

TITLE: CrocGuard® Transport Frame Guidelines

CONFIGURATION: Default

DWG TYPE: Assembly

DWG NO.: SD-MIS-0022A

REVISION: A

SHEET SIZE: A3

WEIGHT: 4139.3kg

DO NOT SCALE DRAWING

SCALE: 1:10

SHEET 1 of 2

9.0 Installation Sequence

The major steps in the installation of CrocGuard® are as follows:

- Set-out.
- Auguring the abutment post holes.
- Lifting the CrocGuard® beams.
- Attachment of the abutment posts.
- Concreting the abutment posts.
- Installing the RamShield® Transitions.

9.1 Set-Out

Mark the location for auguring of holes for the abutment posts. Confirm exact beam length (measure from the mid-point between holes of the connection plates at each end of the CrocGuard® beam).

Mark a line on the pavement at each end of the installation at a spacing matching the exact length of the measured CrocGuard® beam. Mark a cross point 350 mm set back from the desired traffic face of the CrocGuard® – this is the centre point for auguring the abutment post hole.

9.2 Auguring the Abutment Post Holes

Potential Hazards: *Use of auger, contact with underground hazards, excessive noise, deep excavation.*

Recommended Control Measures: *Observe the safe work instructions as per machinery requirements, ensure the area has been inspected for underground hazards and wear appropriate hearing protection.*

Drill each abutment post hole 600 mm diameter to a depth of 1800 mm. If rock or weak soil conditions are encountered, seek advice from Safe Direction.

Once the first hole has been augured re-check the centre line distance to the second hole. Adjust the positioning for the second hole for any movement that may have occurred from first augur hole being kicked off its original mark.

9.3 Lifting the CrocGuard® Beams

Potential Hazards: *Falling of load, swaying of load, contact with above-ground hazards, poor communication and poor visibility.*

Recommended Control Measures: *Observe the safe work instructions as per machinery requirements, ensure that all slings and chains are appropriately load rated, maintain a safe exclusion zone, only sling from lifting points and establish a clear communication process.*

CrocGuard® is supplied as a fully assembled beam with four (4) lifting points. Two (2) lifting points are positioned 3 m apart at the centre of the beam. Two (2) further lifting points are each located 1.5 m from each end of the beam.

Beams can be lifted from either the two (2) central points or the two (2) outer points. The beam can be lifted with a single or two (2) cranes.

The angle of any lifting chain or sling should not exceed 30 degrees from vertical.

Lifting anchors are all 8.5 tonne rated Reid Swift Lifts regardless of the CrocGuard® beam length. Safe Direction will supply two (2) off Reid Swift Lift Clutches on loan for each project.

Position the beam adjacent to the excavated abutment post holes and lower onto the support stands supplied by Safe Direction.

The support stands are purposefully designed such that the beam will be just below its installed height. This is to permit chocking to the finish height.

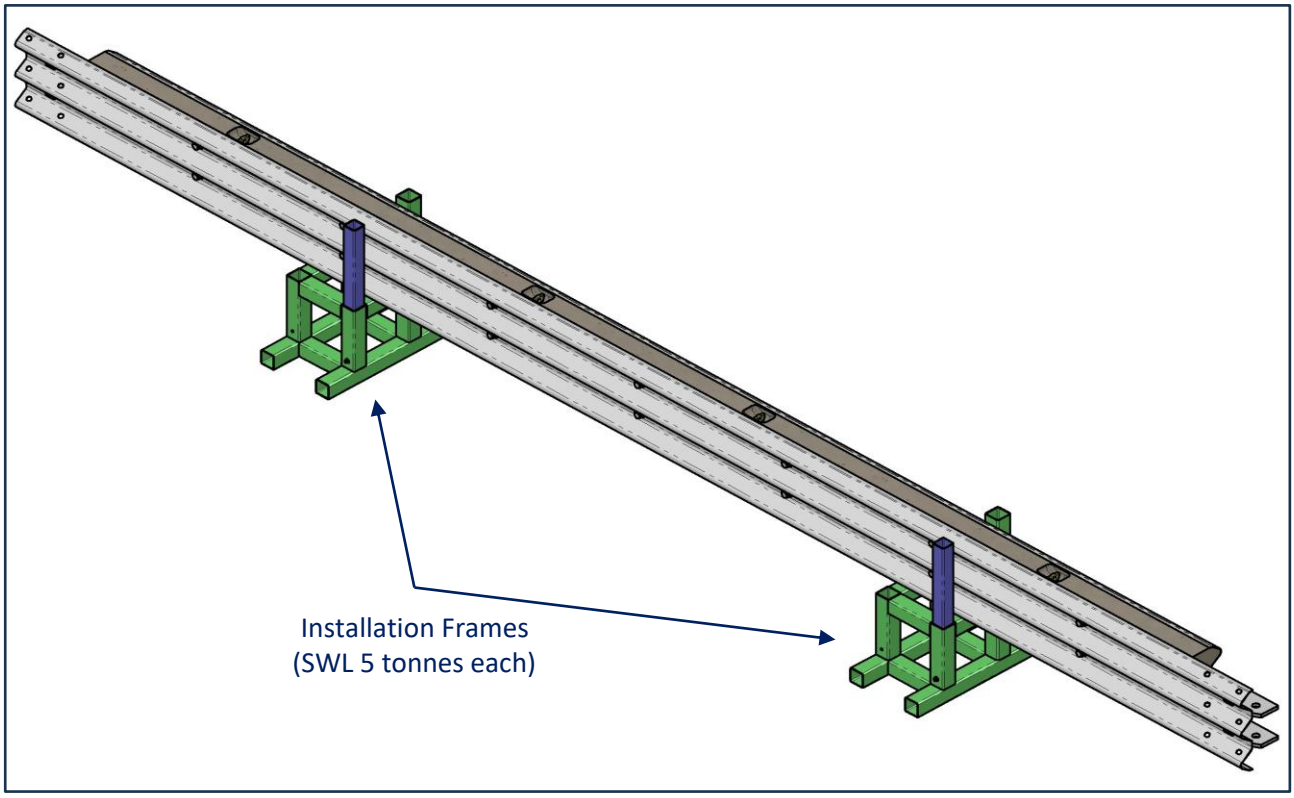

Figure 10: Positioning CrocGuard® on the Support Stands.

Notes –

1. **Pre-use inspection** – Install Support Stands should be inspected prior use. Support Stands must not be used if there is any damage to the structural elements or welds. The Support Stands must also not be used if there is any distortion to their shape – All SHS Sections are fabricated to an orthogonal construction (90 degrees to adjacent members).
2. CrocGuard beam is to be supported by minimum two (2) Install Stands.
3. Install Support Stands are to be placed on firm and uniform ground/surface such as asphalt, concrete pavements or well-compacted ground with minimum 100kPa allowable bearing capacity with maximum slope of **5 degrees**.
4. Should Install Support Stands be placed on natural ground/substrate with allowable bearing capacity less than 100kPa, a minimum 500mm-wide x 800mm-long x 10mm-thick steel plate is to be provided at the base of each stand.
5. Safe Working Load (SWT) of 5t for each Install Stand.
6. 8m CrocGuard beam shown for reference only.

REVISIONS

REV.	ZONE	DESCRIPTION	DATE	APPV'D
A		Initial Issue	01/07/2024	HW

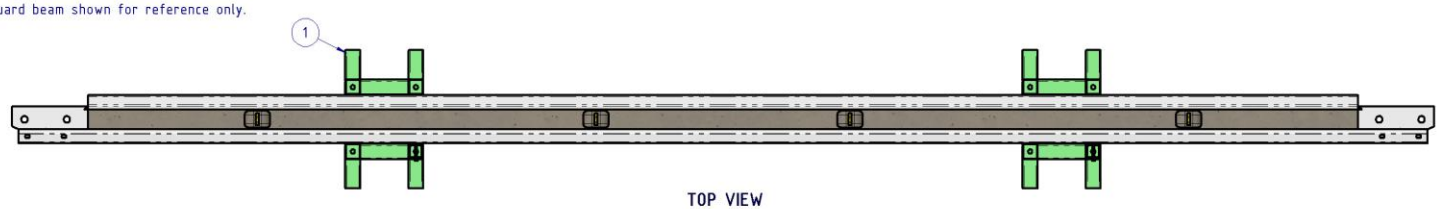

TOP VIEW

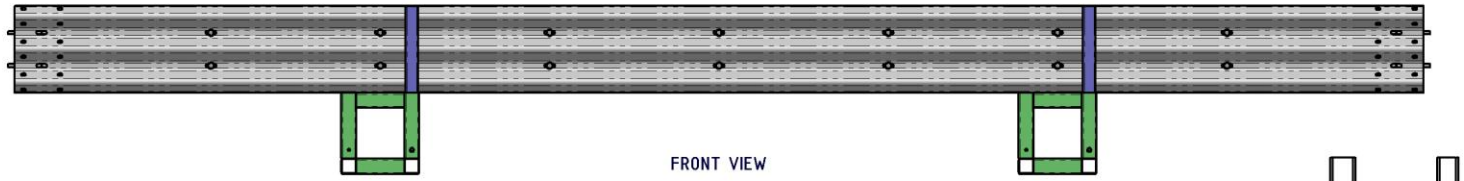

FRONT VIEW

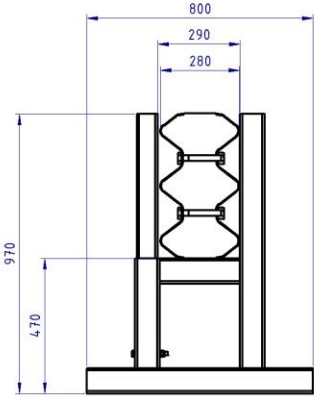

VIEW A
SCALE 1:15

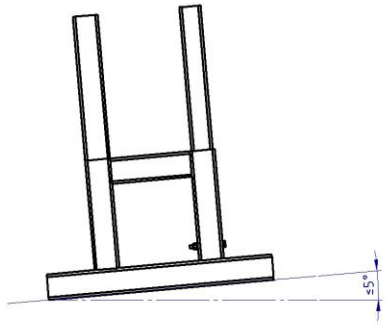

INSTALL STAND
MAXIMUM SLOPE

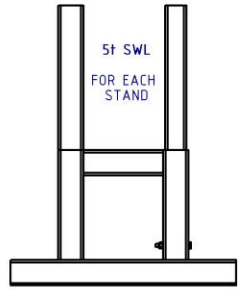

INSTALL STAND (SWL)

BOM Table – CrocGuard Install Stand Guidelines Default

ITEM NO.	QTY	PART NUMBER	DESCRIPTION	Configuration Name	Weight kg EA
1	2	SD-MIS-0025	CrocGuard® Install Support Frame Assy – Mk2	Default	56.6

MATERIAL:
FINISH:

SafeDirection CRASH BARRIER SOLUTIONS

COPYRIGHT All rights reserved ABN 53 156 459 684
These drawings, plans and specifications and the copyright therein are the properties of **Safe Direction Pty Ltd** and must not be used, reproduced or copied wholly or in part without written permission.

STATUS	NAME	DATE
DRAWN	W. Refahi	1/07/2024
CHK'D	T. Colquhoun	01/07/2024
APPV'D	H. Wallace	01/07/2024

UNLESS OTHERWISE SPECIFIED: GENERAL TOLERANCES: ±0.5mm ALL DIMENSIONS ARE IN mm
THIRD ANGLE PROJECTION

STATUS: **In DESIGN**

PROJECT:
TITLE: CrocGuard Install Stand Guidelines
CONFIGURATION: Default
DWG TYPE: Assembly
DWG NO. SD-MIS-0025A
REVISION: A
SHEET SIZE: A3
WEIGHT: 2133.8kg
DO NOT SCALE DRAWING
SCALE: 1:10
SHEET 1 of 2

ramshield.com

9.4 Attaching the Abutment Post

Potential Hazards: *Heavy lifting, hand injury from pinch points and injury from movements and posture*

Recommended Control Measures: *Use machinery to lift abutment posts, wear gloves and observe correct techniques when lifting (bend at the knees).*

Place the post reinforcing cage into the excavated post hole. Lift the abutment post using a plate clamp and orientate with the connecting brackets on the traffic side.

Lower the abutment post into the hole ensuring the post is positioned within the reinforcing cage.

Align the post connecting brackets with the CrocGuard® brackets and secure with four (4) M36 x 100 mm structural bolts, nuts and washers.

The bolt assemblies should be tightened to 100 Nm, which can be achieved by hand using a standard-length spanner.

With both abutment posts attached, check the CrocGuard® beam alignment and height. The CrocGuard® beam can be lifted with the abutment posts attached to adjust the height by chocking the support stands.

9.5 Concreting the Abutment Post

Potential Hazards: *Heavy machinery, hand injury from pinch points and injury from movements and posture.*

Recommended Control Measures: *Observe the safe work instructions as per machinery requirements, wear gloves and observe correct techniques when lifting (bend at the knees).*

Pour 32 Mpa concrete into the post hole. The reinforcing cage should be held off the bottom of the hole until sufficient concrete is poured to position the top of the cage 50 mm to 100 mm below the finished surface level.

Vibrate the concrete while pouring and trowel the surface once pouring is complete.

Excess concrete may be poured into the abutment post, however this is not required for the performance of CrocGuard®.

It is recommended that the support stands remain for 24 hours to allow the concrete to cure.

9.6 Installing the RamShield® Transition

A RamShield® Transition is required to be installed at each end of the CrocGuard® beam. Refer to the RamShield® Transition Product Manual for assembly guidelines and design considerations.



Figure 11: Transporting CrocGuard® Beams.

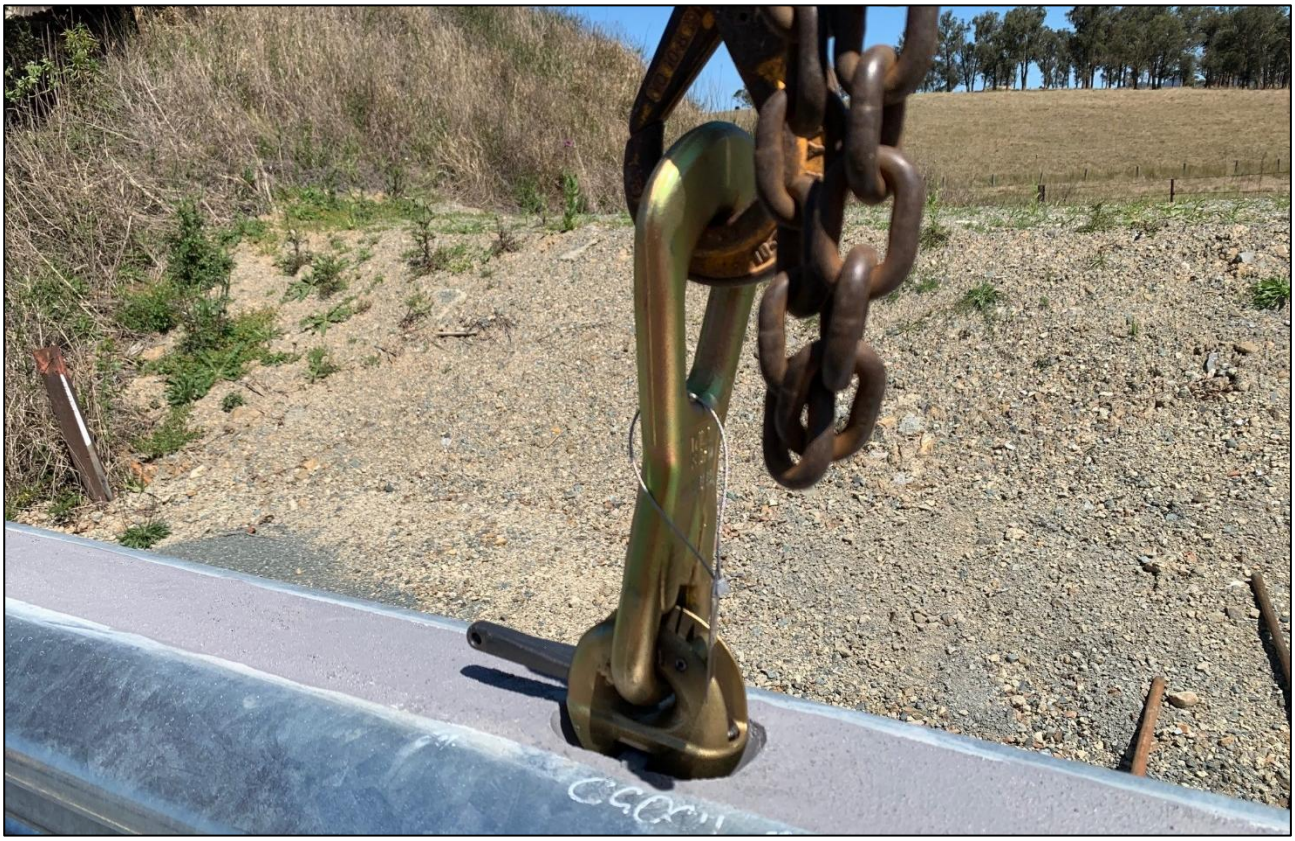

Figure 12: Swift Lift Clutches.

























CrocGuard® Inspection Form

Inspection Date	
Client	
Project Reference	
Name of Inspector	
Company	

❑ Yes ❑ No	Each abutment post has been placed in a 600 mm x 1800 mm deep hole (or as approved by Safe Direction).
❑ Yes ❑ No	The abutment post has been placed within the reinforcement cage.
❑ Yes ❑ No	Each abutment post is secured to the CrocGuard® beam with four (4) M36 x 100 mm structural bolts/nuts/washers.
❑ Yes ❑ No	Each M36 x 100 mm bolt assembly has been tightened to 100 Nm.
❑ Yes ❑ No	The abutment post reinforcement cage has been positioned 50 to 100 mm below finished surface level.
❑ Yes ❑ No	The concrete strength used for securing the abutment posts is minimum 32 Mpa.
❑ Yes ❑ No	The height to top of the CrocGuard® beam is 980 ± 40 mm.
❑ Yes ❑ No	RamShield® Transitions have been installed at each end of the CrocGuard® beam

Comments/Notes

10.0 Maintenance

Crash testing of CrocGuard® has demonstrated outstanding durability and resistance to damage.

Following an impact with a 1100 kg passenger car travelling at 100 km/h and 25 degrees, the CrocGuard® beam and abutment posts were undamaged and reused for subsequent crash testing.

Bridges and culverts typically have narrow lane widths limiting real-life impacts to shallower angles than the MASH crash test conditions.

Periodic inspections of CrocGuard® are recommended to assess the following:

- Debris has not accumulated around the barrier which may impede the function of the barrier.
- Vegetation around the barrier is appropriately maintained.
- Nuisance impacts have not gone undetected.
- The anchor assembly at the end terminals is taut and the bearing plate is correctly aligned.

11.0 Repair

In the event of a vehicle impact, the barrier should be inspected for permanent deformation and concrete cracking.

Onsite repairs to CrocGuard® should be limited to re-compaction of soil around the abutment posts and galvanising damage to the thrie-beam rail which can be repaired using two (2) coats of a zinc-rich paint.

