RocketBloc®

Elevating Compliance of G4 W-Beam to MASH TL3

RocketBloc



MASH TL3 Compliant

ramshield.com

Table of Contents

1.0 Introduction **5**
2.0 Specifications **5**
3.0 How RocketBloc® Works **6**
4.0 RocketBloc® Crash Test Performance **7**
5.0 Limitations of G4 W-Beam with C-Blocking Pieces **8**
5.1 C-Block Sectional Strength 8
5.2 W-Beam Release 8
5.3 W-Beam Rail Height 9
5.4 W-Beam Position 9
6.0 RocketBloc® Design Benefits **10**
6.1 Sectional Strength 10
6.2 W-Beam Rail Height 10
6.3 No Disturbance to Existing C-Posts 10
6.4 Rail Release Mechanism 10
6.5 Removal of Stiffener Plates 10
6.6 W-Beam Position 11
6.7 System Dynamic Deflection 11
6.8 Attachment of BikerShield™ 12
7.0 Component Identification **13**
8.0 Tools Required **14**
8.1 Recommended PPE 14
9.0 Site Establishment **14**
9.1 Traffic Control 14
9.2 Unloading Exclusion Zone 14
10.0 Installation Sequence **15**
10.1 Removal of the C-Blocks 15
10.2 Attaching the RocketBloc® 15
11.0 Maintenance **17**
12.0 Repair **17**
12.1 Removal of Damaged Posts 17
12.2 Removal of Damaged Rails 18
RocketBloc® Inspection Form **19**



Version	Date	Revisions
02	October 2026	Updated format.

Leading Safety

Successfully crash tested to MASH Test Level 3

Complies with AS/NZS 3845.1:2015 Road Safety Barrier systems and Devices

Elevates G4 W-Beam to MASH compliance

Stable containment and redirection of a 2270 kg pick-up truck travelling at 100 km/h and 25 degrees

Maintains the original G4 W-Beam deflection of 1.0 m

Superior Design

Maintains the same offset distance between the w-beam and C-post

Strong RHS section increases torsional strength

Introduces controlled release of the w-beam during a vehicle collision

All-steel construction

Increased resistance to UV degradation and bushfires when compared to plastic block designs

Compatibility

The 800 mm w-beam rail height provides compatibility with MASH compliant end terminals

Suitable for attachment to existing C-posts 660 mm to 760 mm above ground level

Suits 2 m C-post spacing

Standard fasteners

Fast Assembly

No disturbance of the existing C-post

No dismantling of the w-beam guardrail

1.0 Introduction

Developed by Safe Direction, RocketBloc® is a steel blocking piece designed for retrofitting to Australian Public Domain G4 W-Beam.

G4 W-Beam was introduced in the mid-1990s and used extensively throughout Australia for new installations until the implementation of MASH compliance by State Road Agencies commencing in 2020.

G4 W-Beam with steel blocking pieces was phased out for new installations, failing to demonstrate compliance with MASH TL3.

G4 W-Beam features 1800 mm or 1850 mm C-posts spaced at 2 m centres supporting w-beam guardrail at a height of between 700 mm to 750 mm above ground level, dependent upon State Road Agency guidelines. The w-beam guardrails are spliced at a post location and a steel blocking piece, the same sectional dimensions as the post, is positioned between each post and the w-beam.

RocketBloc® replaces the C-block and elevates compliance of the G4 W-Beam system to MASH TL3.

The development of the RocketBloc® follows feedback from asset owners seeking to upgrade the containment level of existing G4 W-Beam installations and provide compliance with MASH and AS/NZS 3845.

This increases the service life of existing installations and provides safe vehicle containment of the current Australian vehicle fleet featuring increasing high centre-of-gravity vehicles.

2.0 Specifications

Crash Test Compliance	MASH Test Level 3
MASH TL3 Dynamic Deflection	0.99 m
RocketBloc® Width	150 mm
System Height	800 mm, measured to top of w-beam
Standard Post Spacing	2.0 m centres
RocketBloc® Finish	Hot dip galvanised in accordance with AS/NZS 4680

3.0 How RocketBloc® Works

RocketBloc® achieves a controlled redirection of errant vehicles by regulating the force to release the rail throughout the impact zone, limiting dynamic deflection and to allow the C-post to collapse without tripping the vehicle.

The separation of the w-beam rail during a vehicle collision is achieved by a release tab. This allows the rail to be disengaged at an optimal load, facilitating safe vehicle containment and redirection.

RocketBloc® is manufactured from 150 x 100 x 4.0 mm RHS providing torsional strength and reducing the potential for the block to deform during a vehicle impact. Retaining shape is an important design consideration to maintain rail height and facilitate controlled release of the w-beam rail.

RocketBloc® attaches directly to the existing C-posts and features elongated mounting slots allowing the w-beam guardrail to be lifted to a height of 800 mm ± 20 mm above road level.

The attachment of RocketBloc® leaves the existing C-posts undisturbed and is suitable for attachment to C-posts measuring 660 mm to 760 mm above ground level to achieve a w-beam rail height of 800 mm ± 20 mm.

The working mechanism of RocketBloc® is a patented concept, designed and developed by Safe Direction. The concept is the latest innovation in guardrail design and sets a new benchmark in simplicity and performance.

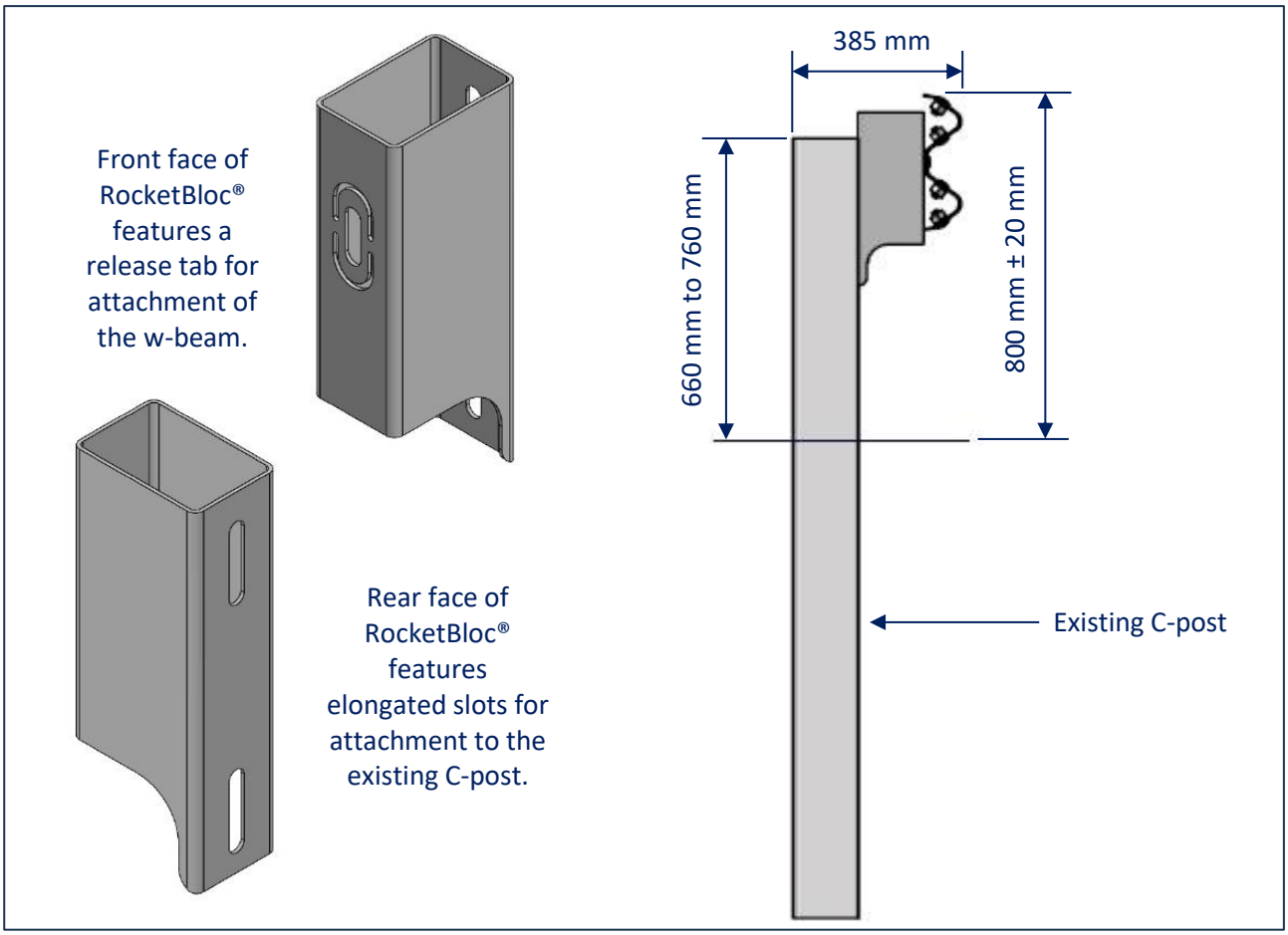

Figure 1: RocketBloc® Features.

4.0 RocketBloc® Crash Test Performance

RocketBloc® has been crash tested and evaluated according to the specifications for Test Level 3 (TL3) of the AASHTO Manual for Assessing Safety Hardware (MASH). The MASH specification is an update to and supersedes NCHRP Report 350 for the purposes of evaluating new safety hardware devices.

MASH is also the basis of testing procedures for road safety systems as stated in *AS/NZS 3845.1: 2015 Road Safety Barrier System and Devices.*

The MASH TL3 crash test is performed with a 2270 kg pick-up truck travelling at 100 km/h and 25 degrees.

Crash testing was performed with RocketBloc® secured to 1800 mm C-posts spaced at 2 m centres and driven into the ground to a depth of 1100 mm, representing a real-life G4 W-Beam installation.



Figure 2: Crash Test Performance of G4 W-Beam with RocketBloc®.

5.0 Limitations of G4 W-Beam with C-Blocking Pieces

Existing G4 W-Beam installations with C-blocking pieces do not comply with MASH.

In 2018 the Austroads Safety Barrier Assessment Panel (ASBAP) notified industry of the adoption of MASH for new product submissions. Products not meeting MASH were subsequently reclassified by State Road Agencies as Legacy Status, meaning the product was no longer accepted for new installations.

5.1 C-Block Sectional Strength

Blocking pieces are designed to minimise the potential for wheel snagging and reduce the likelihood of a vehicle vaulting the barrier by maintaining rail height during the initial stages of post deflection.

The open section C-blocking pieces used within the G4 W-Beam system are prone to folding and collapsing during a vehicle impact.

Failure of the block to retain its geometry during impact can prevent the w-beam from disengaging from the block, resulting in the w-beam being dragged downwards and subsequent vaulting of the barrier by the errant vehicle.



Figure 3: Limitations of C-Block Sectional Strength.

5.2 W-Beam Release

Guardrail systems should achieve a controlled redirection of errant vehicles by releasing the rail throughout the impact zone, limiting dynamic deflection and to allow the post to collapse without tripping the vehicle.

Australian public domain G4 W-Beam relies upon the mushroom head of the M16 post bolt to pull through the rail slot during impact to release the w-beam.

When the bolt is positioned centrally within the rail slot, the bolt is secured along the top and bottom edge of the rail slot only, requiring the lowest force to pull through.

By comparison, when the bolt is positioned near the end of the slot, the bolt head must pull through the top, bottom and side material of the slot, requiring a significantly higher force.

The position of the post bolt within the rail slot may compromise the release of the w-beam rail and is compounded by deformation of the C-block as described in Section 5.1.

5.3 W-Beam Rail Height

The implementation of MASH follows changes to vehicle fleets and the increasing sales of heavier and higher centre-of-gravity vehicles.

The installation height for Australian public domain G4 W-Beam ranges from 700 mm to 750 mm. This w-beam rail height in combination with reliance on the mushroom head bolt to pull through the rail slot has not demonstrated safe containment of the MASH heavy passenger vehicle (2270 kg pick-up truck).

By comparison, most MASH TL3 compliant w-beam systems adopt a rail height of 800 mm ± 20 mm.

	*The installation of "Abraham Blocks" to raise the height of an existing G4 W-Beam installation does not provide MASH compliance. Abraham Blocks are not crash tested and are prone to the same design limitations as conventional C-blocking pieces.*

5.4 W-Beam Position

The assembly of G4 W-Beam positions the top of the C-post and C-blocking piece up to 30 mm above the top of the w-beam guardrail. This creates a potential snagging point, particularly for a dislodged motorcyclist.

By comparison, Safe Direction's range of MASH compliant safety barrier systems position the w-beam rail 30 mm to 50 mm above the top of the post shielding this snag point.



Figure 4: C-Block Snag Point.

6.0 RocketBloc® Design Benefits

6.1 Sectional Strength

RocketBloc® is manufactured from 150 x 100 x 4 mm RHS. The use of a closed section RHS for the manufacture of RocketBloc® provides torsional strength, reducing the potential for the block to deform during a vehicle impact. Retaining shape during a vehicle collision is an important design consideration to maintain rail height and facilitate controlled release of the w-beam rail.

The 150 mm width of RocketBloc® maintains the same offset distance as the substituted C-blocking piece and therefore does not change the horizontal alignment of the safety barrier system.

The RocketBloc® is an all-steel construction and hot dip galvanised after fabrication distinguishing it from solid blocking pieces manufactured from plastic or composite materials which may be susceptible to long term UV degradation and bushfire risk.

The all-steel, durable RocketBloc® provides an important design consideration for safety barrier systems installed in areas prone to extreme heat and bushfire risk.

6.2 W-Beam Rail Height

RocketBloc® features elongated mounting slots allowing the block to lift above the top of the C-post, positioning the w-beam guardrail 800 mm ± 20 mm above road level. This rail height in combination with the RocketBloc® release mechanism provides safe containment and redirection of the 2270 kg pick-up truck.

6.3 No Disturbance to Existing C-Posts

Guardrail posts are designed to provide lateral support to the system during a vehicle collision. The material around the posts should be well compacted with sufficient distance to the batter hinge point.

Removing or lifting posts disturbs the ground material and may damage road seals or adjacent embankments.

RocketBloc® does not require lifting or removal of the existing C-posts. The design of RocketBloc® is suitable for attachment to a C-post measuring 660 mm to 760 mm above ground level to achieve a w-beam rail height of 800 mm ± 20 mm.

6.4 Rail Release Mechanism

The controlled release of the w-beam during a vehicle collision is achieved by a tab punched into the face of the RocketBloc® which regulates the forces required for the post bolt to either pull through the tab or rail slot, whichever requires the lower force.

Releasing at an optimal load retains rail height, limits dynamic deflection, and allows the post to collapse without tripping the vehicle.

6.5 Removal of Stiffener Plates

The attachment of RocketBloc® does not require stiffener plates which may be removed during retrofitting. The removal of stiffener plates eliminates a potential projectile hazard during a vehicle collision.

6.6 W-Beam Position

The RocketBloc® positions the w-beam rail approximately 30 mm above the top of the block shielding a potential snag point and providing consideration for vulnerable road users.

6.7 System Dynamic Deflection

Guardrails should be installed with sufficient clearance behind the barrier to allow for the expected deflection of the system.

Many installations of G4 W-Beam with C-blocking pieces throughout Australia adopt a design deflection of 1.0 m. This value is derived from USA public domain crash test outcomes performed in accordance with NCHRP Report 350.

NCHRP Report 350 has since been superseded by MASH reflecting changes to the vehicle fleet and the increasing sales of heavier and higher centre-of-gravity vehicles.

The TL3 heavy passenger vehicle impact has subsequently changed from a 2000 kg pick-up truck (2000P) to a 2270 kg pick-up truck (2270P), increasing impact energy by 13 %.

The MASH TL3 deflection of G4 W-Beam with RocketBloc® was recorded as 0.99 m, measured from the face of the w-beam rail.

Therefore, despite the increase in impact energy and the higher centre-of-gravity of the MASH 2270P, no additional clearance is required behind the G4 W-Beam system when retrofitting with RocketBloc® and elevating compliance to MASH TL3.



6.8 Attachment of BikerShield™

BikerShield™ is a motorcycle safety barrier system designed to reduce the impact severity for riders when colliding with a roadside guardrail barrier.

BikerShield™ is positioned below the guardrail beam and prevents a dismounted motorcyclist from contacting the supporting posts of the guardrail barrier system.

BikerShield™ provides safe rider containment and redirection through the combination of spring mounting brackets and lightweight, corrugated panels. The spring brackets attach directly to the guardrail beam mid-span between posts and absorbs the impact energy of the sliding rider.

The BikerShield™ mounting bracket position is an important design consideration as vertical alignment with the face of the guardrail beam reduces the potential for rider snagging.

During retrofitting of G4 W-beam with RocketBloc®, the w-beam rail is lifted to a height of 800 mm ± 20 mm providing sufficient clearance below the guardrail beam for the positioning of the BikerShield™ panel.

The attachment of BikerShield™ requires no dismantling of the G4 W-beam system. An 18 mm diameter hole is drilled into the w-beam panel, mid-span between posts to accommodate attachment of the spring mounting bracket.

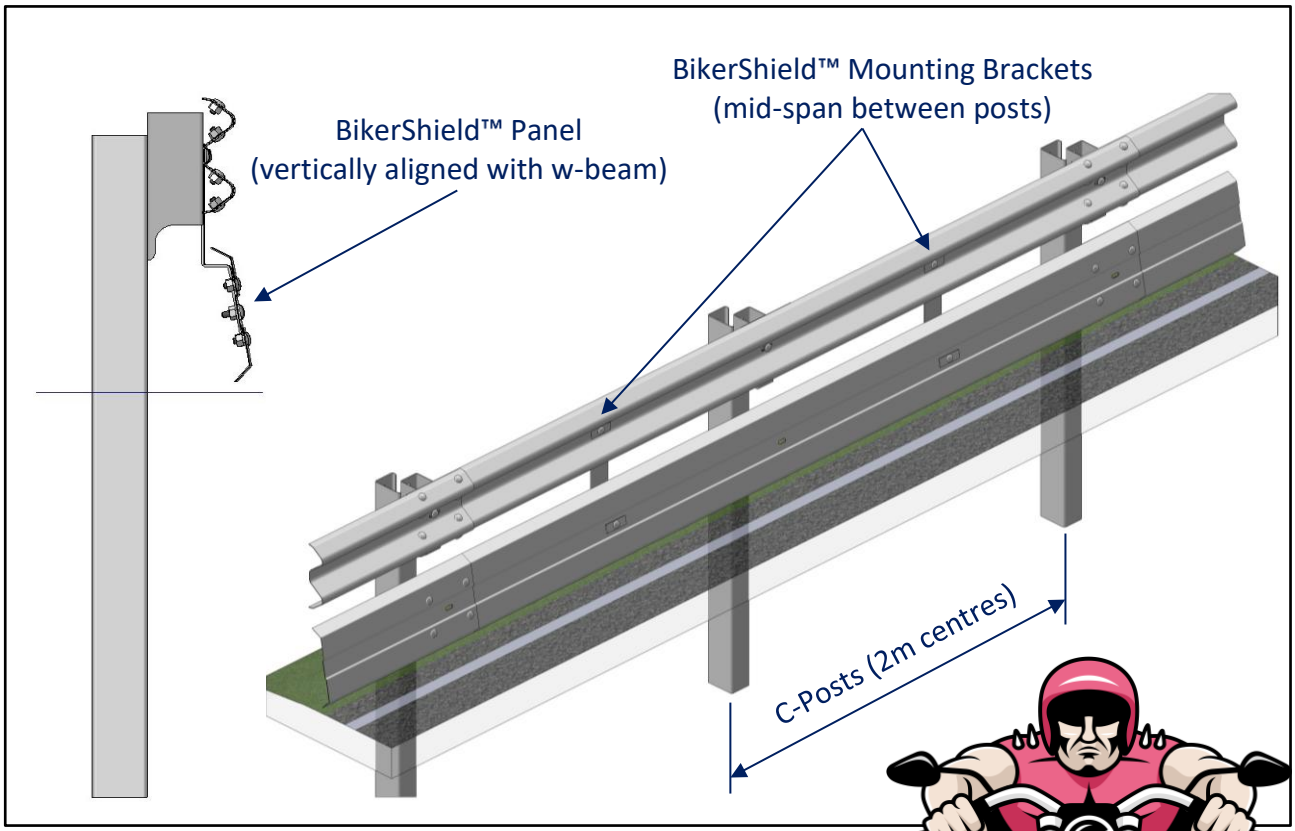

Figure 6: Attachment of BikerShield™ to G4 W-Beam with RocketBloc®.

7.0 Component Identification (not to scale)

Existing G4 W-Beam Installed Components



C-Block



Stiffener

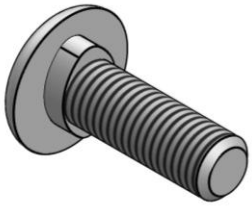

M16 x 50 mm
Mushroom Head
Post Bolt

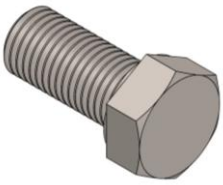

M16 x 35 mm
Hex. Head Block Bolt



M16 Standard Nut

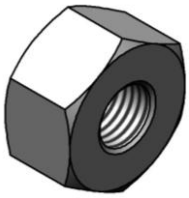

M16 Oversize Nut

Retrofit Components



RocketBloc®



M16 Washer

8.0 Tools Required

Tools required for the installation of RocketBloc® include:

- Drill driver with 32 mm attachment.
- Hand socket with 24 mm attachment.
- Tape measure.

8.1 Recommended PPE

It is recommended that the following personal protective equipment (PPE) be provided for the safe installation of the RocketBloc®:

- Safety footwear.
- Gloves.
- High visibility clothing.

9.0 Site Establishment

9.1 Traffic Control

Prior to the commencement of any work, the site should be evaluated for risks to workers, pedestrians and other road users. The establishment of traffic control should provide safe travel for passing vehicles and/or pedestrians and appropriately protect workers near the roadside.

9.2 Unloading Exclusion Zone

It is recommended that an exclusion zone be maintained around the unloading process. This provides distance between moving machinery and workers in the event that goods or the machinery move unexpectedly.

Unloading and the storing of the product on a level surface is recommended. Storing product adjacent to the installation area eliminates the requirement for workers to carry items over long distances.

10.0 Installation Sequence

The steps in the installation of RocketBloc® are as follows:

- Removal of the C-blocking piece.
- Removal of the stiffener plate.
- Installation of RocketBloc®.
- Re-attaching the w-beam guardrail.

10.1 Removal of the C-Blocks

Potential Hazards: *Injury from movements and posture, hand injury from pinch points, strain to wrists from loosening bolts and excessive noise from use of impact driver.*

Recommended Control Measures: *Wear gloves, use an impact drill to loosen bolts and wear appropriate hearing protection.*

- Loosen and remove the M16 x 50 mm mushroom head bolt securing the w-beam rail to the C-block.
- Loosen and remove the two (2) M16 x 30 mm (or 35 mm) hexagonal head bolts and nuts securing the C-block to the C-post.
- Remove the C-Block.
- Remove the stiffener plate.

10.2 Attaching the RocketBloc®

Potential Hazards: *Injury from movements and posture, hand injury from pinch points, strain to wrists from tightening bolts and excessive noise from use of impact driver.*

Recommended Control Measures: *Wear gloves, use an impact drill to tighten bolts and wear appropriate hearing protection.*

It is recommended that new fasteners be used for the attachment of the RocketBloc®.

- Secure the RocketBloc® to the C-post with two (2) M16 x 35 mm hexagonal head bolts, nuts & washers. The washers are positioned under the head of each bolt.
- Position the RocketBloc® approximately 770 mm above road level before tightening.
- Reattach the w-beam rail using a M16 x 50 mm mushroom head bolt and oversize nut.
- Position the w-beam 800 mm ± 20 mm above road level before tightening.

There is no torque requirement for the tightening of the bolts. They should be tightened to a snug position.

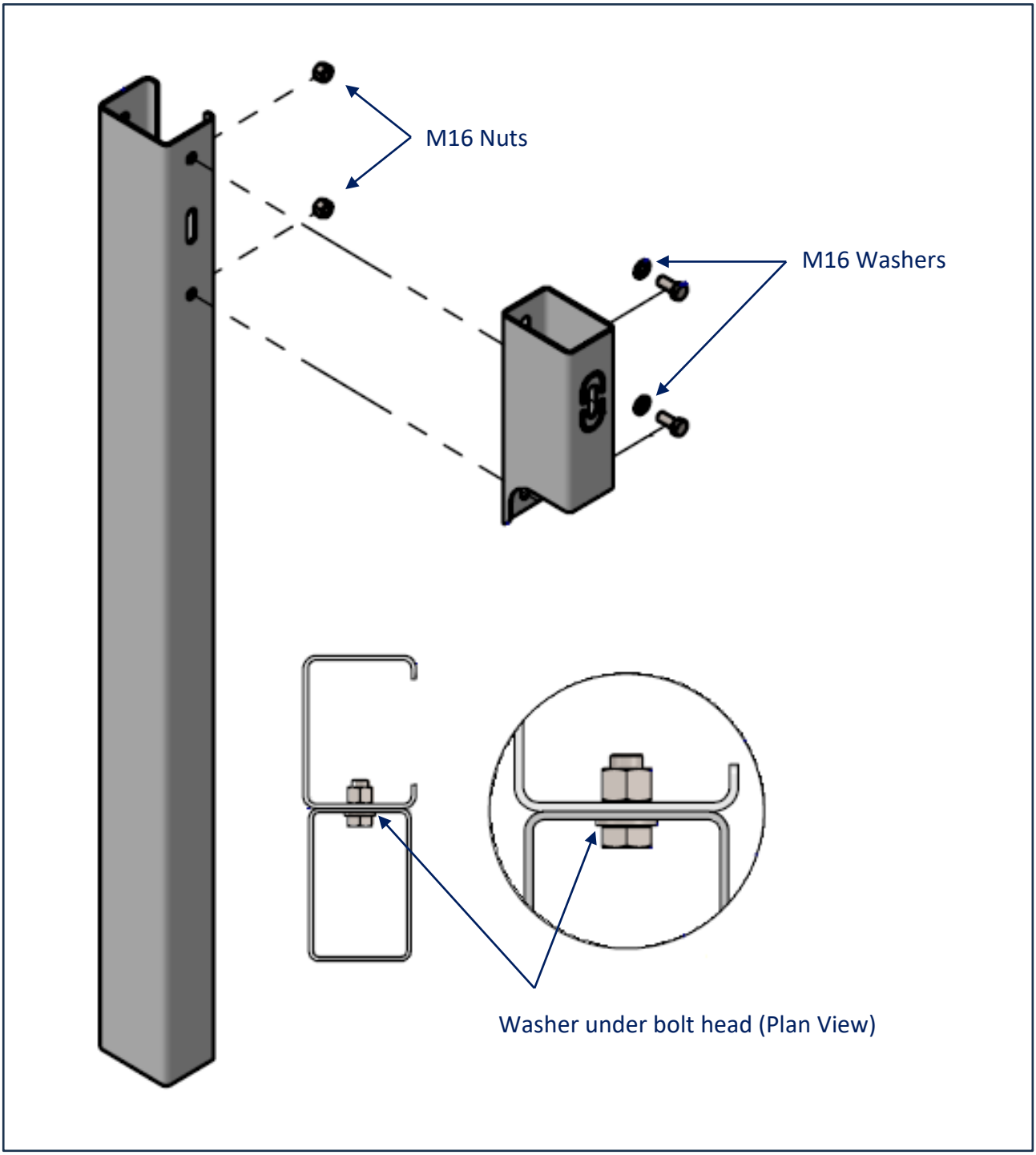

Figure 7: Attachment of RocketBloc® to C-Post.

11.0 Maintenance

Except for repairs due to impacts, it is recommended that an annual inspection be undertaken to assess the following:

- The barrier is appropriately delineated (if required).
- Debris has not accumulated around the barrier which may impede the function of the barrier.
- Vegetation around the barrier is appropriately maintained.
- Nuisance impacts have not gone undetected.

The anchor assembly at the end terminals is taut and the bearing plate is correctly aligned.

12.0 Repair

In the event of a vehicle impact, damage to the barrier is to be assessed in accordance with Table 1.

Typically, impacts will require replacement of damaged sections of w-beam rails, C-posts and RocketBlocs®. It is also recommended that new bolts be used where w-beam rails, C-posts and RocketBlocs® have been replaced.

Additional tools required for repair include:

- Acetylene torch to cut away damaged rail.
- Heavy duty chain to remove damaged posts.
- Sledgehammer.
- Post extractor.

Similar to the installation sequence, it is recommended that the guidelines contained in Section 9.0 be observed in the establishment of traffic control and an unloading exclusion zone.

If damaged posts are being replaced, the area should be investigated for underground services.

12.1 Removal of Damaged Posts

Potential Hazards: *Hand injury from pinch points, hand injury from damaged edges and injury from sudden movement as the posts are released.*

Recommended Control Measures: *Wear gloves and maintain an appropriate exclusion zone around the post until removed.*

Damaged posts should be removed using an appropriate post extractor. Once the damaged post is removed, the ground material should be suitably compacted before a replacement post is installed.

Upstream and downstream posts outside of the impact area should also be inspected for movement and the surrounding ground material recompacted if required.

12.2 Removal of Damaged Rails

Potential Hazards: *hand injury from pinch points, hand injury from damaged edges, injury from sudden movement as rails are released and excessive noise from use of impact drill.*

Recommended Control Measures: *Wear gloves and wear appropriate hearing protection.*

Using an impact drill, remove the splice bolts at the rail connection. Rails that have twisted or bent during impact may need to be cut into manageable sections using an acetylene torch.

Upstream and downstream rails outside of the impact area should also be inspected for any minor knicks or elongation of the post slots.



RocketBloc

RocketBloc® Inspection Form

Inspection Date	
Client	
Project Reference	
Name of Inspector	
Company	

❑ Yes ❑ No	The system is suitably anchored with approved state road agency end terminals.
❑ Yes ❑ No	Each RocketBloc® is secured to the C-post with two (2) M16 x 35 mm hexagonal head bolts, nuts and washers.
❑ Yes ❑ No	The M16 washers are positioned under the head of the hexagonal bolt.
❑ Yes ❑ No	The W-beam rail is secured to each RocketBloc® with one (1) M16 x 50 mm mushroom head bolt & oversize nut.
❑ Yes ❑ No	The height measured to the top of the rails is 800 mm ± 20 mm.
❑ Yes ❑ No	All bolts are tightened.
❑ Yes ❑ No	Any minor damage to the galvanised finish is repaired using two coats of an organic zinc rich paint.
❑ Yes ❑ No	The barrier is appropriately delineated (if required).
❑ Yes ❑ No	The area around the barrier is free of debris.

Comments/Notes

Table 1: Damage Assessment Guidelines

Type of Damage	Description of the Damage	Remedial Action
Damage to the galvanised coating on the C-posts.	The sum total of the damaged area does not exceed 70 cm^2 (0.5 % of the total surface area).	An organic zinc rich paint is to be applied to the repair area in two coats.
	The sum total of the damaged area exceeds 70 cm^2 (0.5 % of the total surface area).	The post is to be replaced.
Damage to the galvanised coating on the rails.	The sum total of the damaged area does not exceed 200 cm^2 (0.5 % of the total surface area) and no individual damaged area exceeds 40 cm^2.	An organic zinc rich paint is to be applied to the repair area in two coats.
	The sum total of the damaged area exceeds 200 cm^2 (0.5 % of the total surface area) or an individual damaged area exceeds 40 cm^2.	The rail is to be replaced.
Damage to the C-posts.	The C-post is bent.	The C-post is to be replaced.
Damage to the RocketBloc®.	The shape of the RocketBloc® is distorted.	The RocketBloc® is to be replaced.
Damage to the release tab.	The tab has distorted and released the post bolt.	The RocketBloc® is to be replaced.
Damage to the w-beam rails.	The rail is dented, twisted or flattened.	The w-beam rail is to be replaced.
	There are nicks in any part of the rail.	
	The slots in the rail are distorted.	
Damage to bolts.	The body of the bolt is distorted.	The bolt is to be replaced.
	The thread of the bolt is damaged.	
Disturbance of material around the posts.	The material around a post is loose.	The material is to be suitably compacted.