Product Data Sheet

RocketBloc®

Updated: October 2026

MASH TL3 Compliant

Crash Test Evaluation

Barrier Configuration	Vehicle Type	Vehicle Mass	Impact Speed	Impact Angle	Impact Energy	Dynamic Deflection
Posts at 2m Centres		2270 kilograms	100 km/h	25 degrees	156.4 kilojoules	0.99 metres

Installation

Post Type	Standard Post Spacing	Block Width	Beam Type	System Height
Driven Post	2.0 m	150 mm	W-Beam	800 mm



Product Data Sheet

RocketBloc®

Updated: October 2026



FRONT VIEW

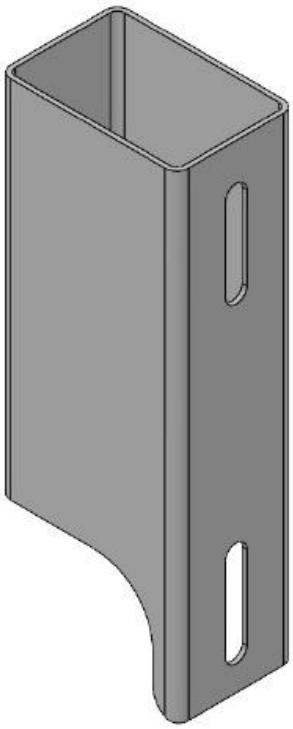

REAR VIEW

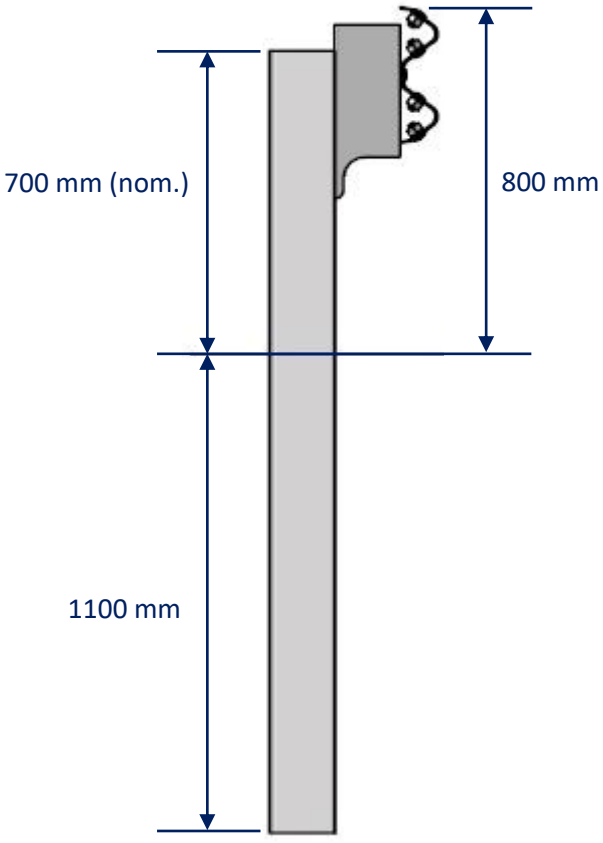

SIDE ELEVATION