REVISIONS				
REV.	ZONE	DESCRIPTION	DATE	APPV'D
A		ORIGINAL ISSUE	7/10/2021	WR

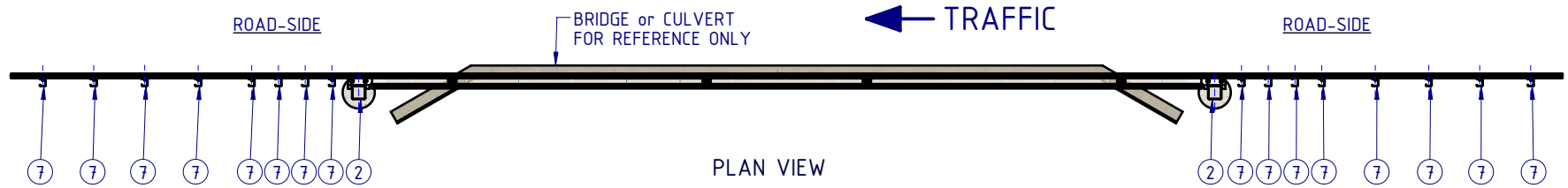

PLAN VIEW

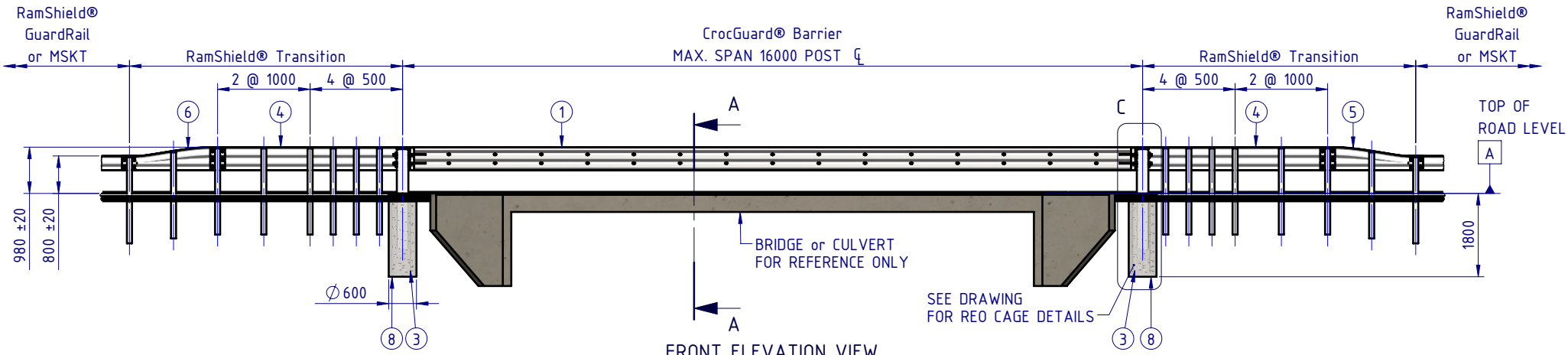

FRONT ELEVATION VIEW

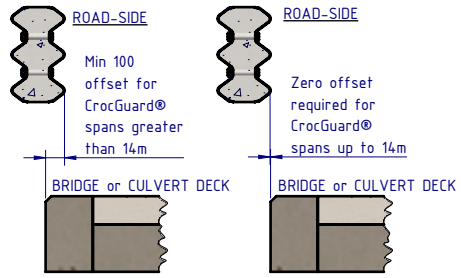

SECTION A-A
SCALE 1:40
CrocGuard® >14m

SECTION B-B
SCALE 1:40
CrocGuard® ≤14m

BOM

ITEM NO.	QTY	PART NUMBER	DESCRIPTION	Weight kg
1	1	CG-TB-SR-1600-AG	CrocGuard® Beam 16m NLL	3925.3
2	2	CG-PG-SH-2150-AG	CrocGuard® Abutment Post	162.2
3	2	CG-RC-05-1400-AU	CrocGuard® Reinforcing Cage for Abutment Post	20.7
4	2	GE-TB-SR-4000-BG	Thrie-Beam Bridge Approach GuardRail 3.5mm BMT	86.3
5	1	GE-TB-SR-1905-AG	Assymetric Approach W-Beam to Thrie-Beam Transition	36.5
6	1	GE-TB-SR-1905-DG	Assymetric Departure Thrie-Beam to W-Beam Transition	36.5
7	16	GR-PG-CS-1860-AG	RamShield® High Containment Post 1860mm	23.9
8	2	SD-RB-06000-03	Concrete Footing 32 MPa (BY OTHERS)	1140.0
9	8	CG-FS-36-0100-HG	M36x100 Structural Hex Bolt / Nut / Washer, Class 8.8 HDG	0.3

MATERIAL:

FINISH: HOT-DIP GALVANISED AS/NZS 4680

STATUS	NAME	DATE
DRAWN	W. Rogulski	14/01/2022
CHK'D	T. Colquhoun	7/10/2021
APPV'D	H. Wallace	7/10/2021

SafeDirection
CRASH BARRIER SOLUTIONS

COPYRIGHT All rights reserved
These drawings, plans and specifications and the copyright therein are the properties of Safe Direction Pty Ltd, and must not be used, reproduced or copied wholly or in part without written permission.

ABN: 53 156 459 684

U.N.O: TOLARANCES: ± 1mm ALL DIMENSIONS ARE IN: mm

THIRD ANGLE PROJECTION

STATUS: APPROVED

TITLE: Road Barriers - CrocGuard®
16m CrocGuard® to RamShield® W-Beam
General Arrangement

DWG NO. SD-RB-06000 | REVISION: A | SHEET SIZE A4

WEIGHT: 45400.7kg | DO NOT SCALE DRAWING | SCALE: 1:125 | SHEET 1 of 4

C:\SDSYD\SD\Assembly\SD-RB Road Barriers\SD-RB-06000 CrocGuard\SD-RB-06000 - 16m CrocGuard to RamShield W-Beam\ Friday, 3 June 2022 7:45:21 AM

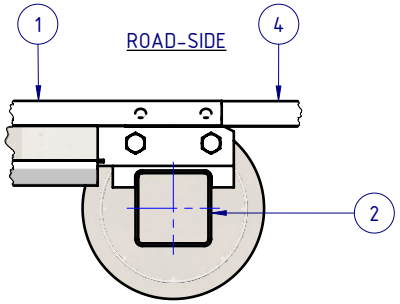

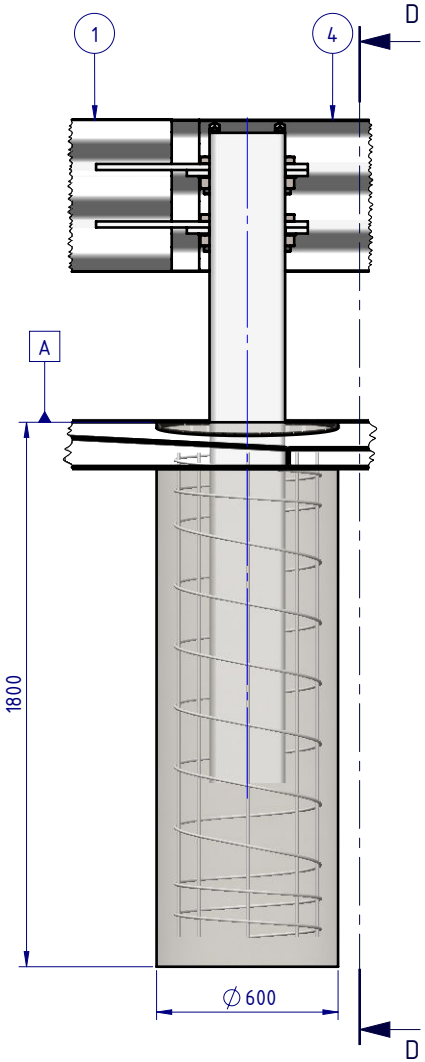

DETAIL C

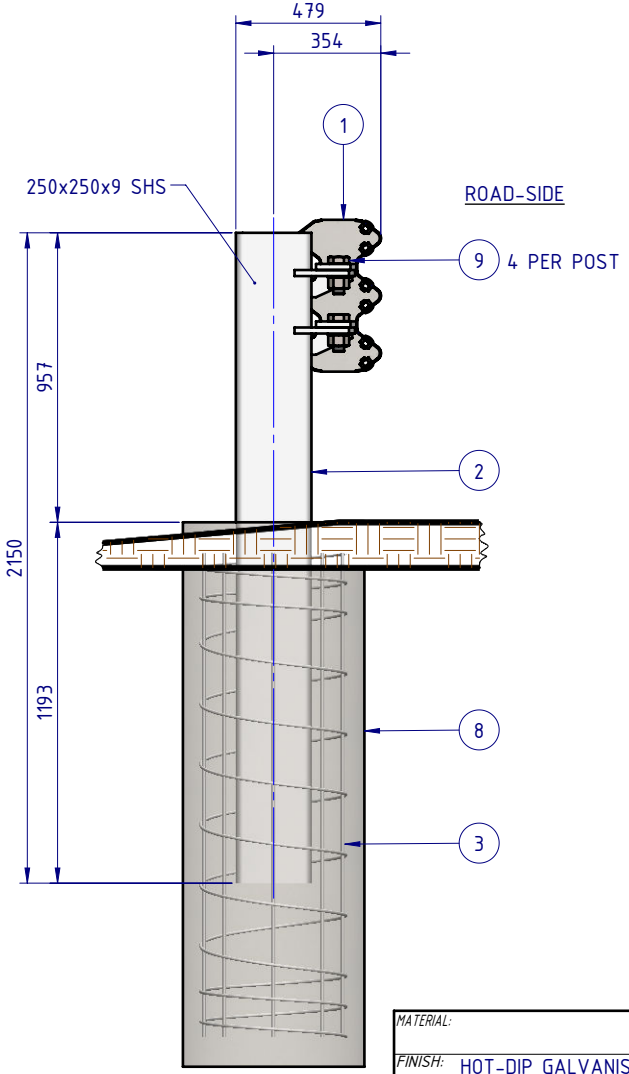

SECTION D-D

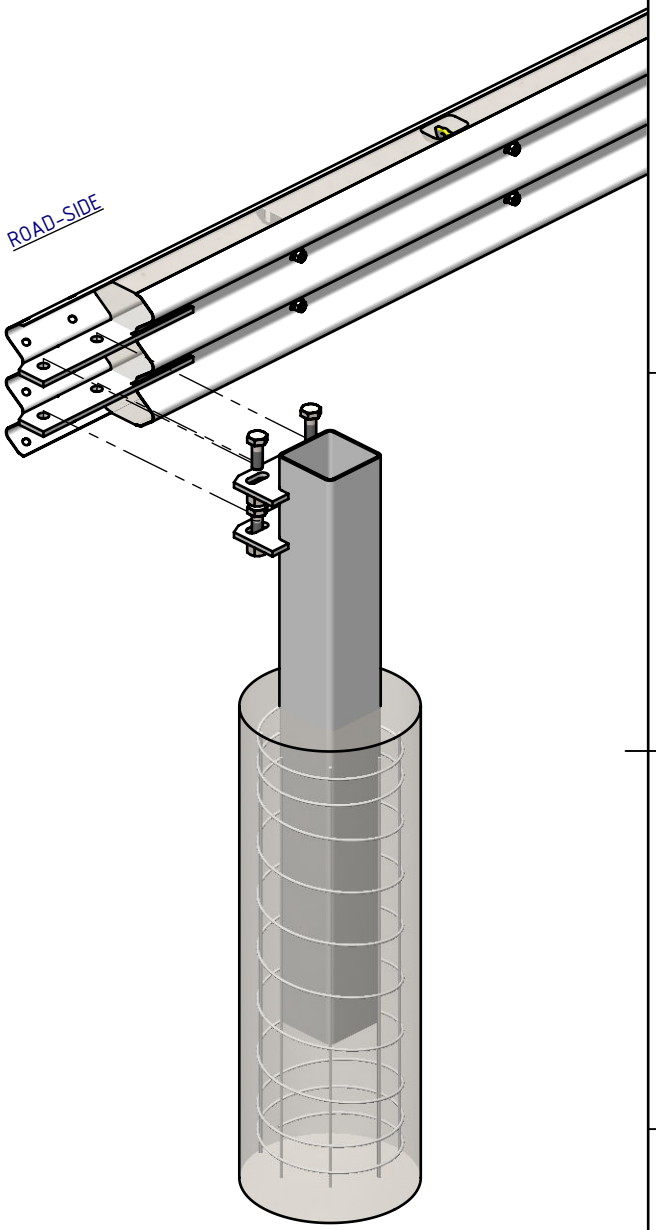

MATERIAL:		
FINISH:	HOT-DIP GALVANISED AS/NZS 4680	
STATUS	NAME	DATE
DRAWN	W. Rogulski	14/01/2022
CHK'D	T. Colquhoun	7/10/2021
APPV'D	H. Wallace	7/10/2021

SafeDirection
CRASH BARRIER SOLUTIONS

COPYRIGHT All rights reserved
These drawings, plans and specifications and the copyright therein are the properties of Safe Direction Pty Ltd, and must not be used, reproduced or copied wholly or in part without written permission.

ABN: 53 156 459 684

U.N.O: TOLARANCES: ± 1mm
ALL DIMENSIONS ARE IN: mm

THIRD ANGLE PROJECTION

STATUS: APPROVED

TITLE:
Road Barriers - CrocGuard®
16m CrocGuard® to RamShield® W-Beam
General Arrangement

DWG NO.	REVISION:	SHEET SIZE
SD-RB-06000	A	A4

WEIGHT: 45400.7kg DO NOT SCALE DRAWING SCALE: 1:25 SHEET 2 of 4

C:\SDSYD\SD\Assembly\SD-RB Road Barriers\SD-RB-06000 CrocGuard\SD-RB-06000 - 16m CrocGuard to RamShield W-Beam\ Friday, 3 June 2022 7:45:21 AM

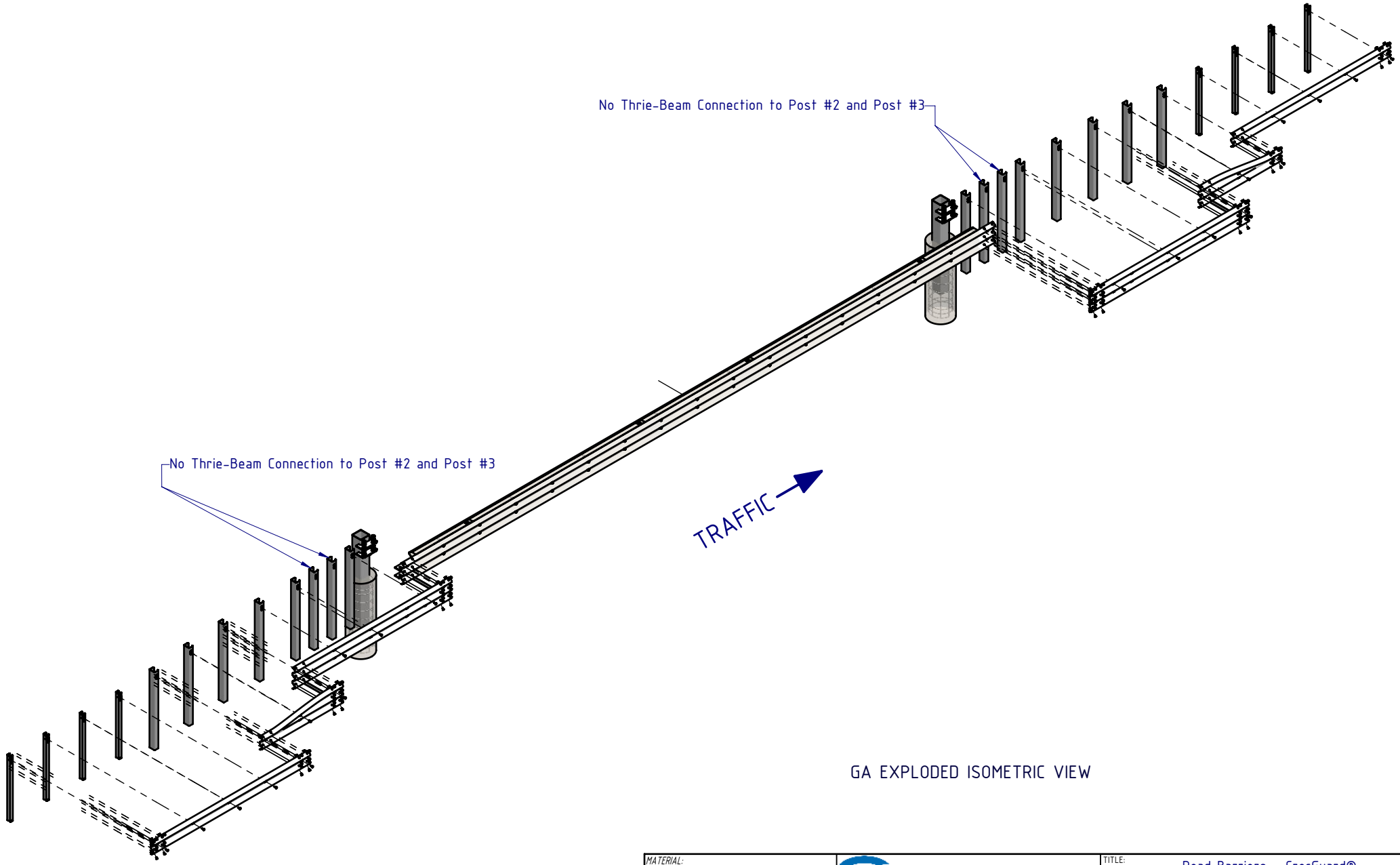

GA EXPLODED ISOMETRIC VIEW

MATERIAL:		
FINISH:	HOT-DIP GALVANISED AS/NZS 4680	
STATUS	NAME	DATE
DRAWN	W. Rogulski	14/01/2022
CHK'D	T. Colquhoun	7/10/2021
APPV'D	H. Wallace	7/10/2021

SafeDirection
CRASH BARRIER SOLUTIONS

COPYRIGHT All rights reserved
These drawings, plans and specifications and the copyright therein are the properties of Safe Direction Pty Ltd, and must not be used, reproduced or copied wholly or in part without written permission.

ABN: 53 156 459 684

U.N.O: TOLARANCES: ± 1mm ALL DIMENSIONS ARE IN: mm

THIRD ANGLE PROJECTION

STATUS: APPROVED

TITLE: Road Barriers - CrocGuard®
16m CrocGuard® to RamShield® W-Beam
General Arrangement

DWG NO.	REVISION:	SHEET SIZE
SD-RB-06000	A	A4

WEIGHT: 45400.7kg | DO NOT SCALE DRAWING | SCALE: 1:100 | SHEET 3 of 4

C:\SDSYD\SD\Assembly\SD-RB Road Barriers\SD-RB-06000 CrocGuard\SD-RB-06000 - 16m CrocGuard to RamShield W-Beam\ Friday, 3 June 2022 7:45:21 AM

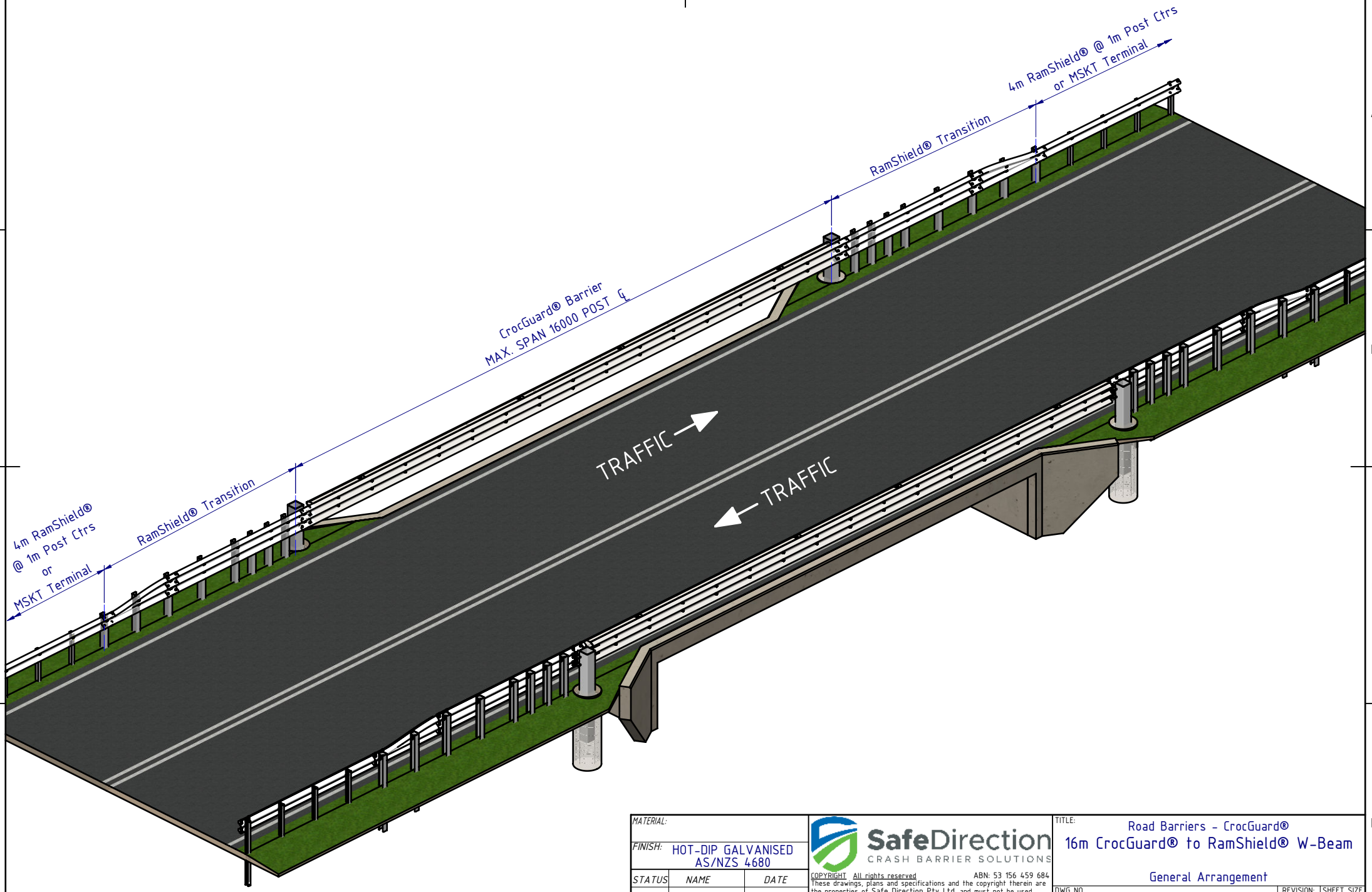

MATERIAL:		
FINISH:	HOT-DIP GALVANISED AS/NZS 4680	
STATUS	NAME	DATE
DRAWN	W. Rogulski	14/01/2022
CHK'D	T. Colquhoun	7/10/2021
APPV'D	H. Wallace	7/10/2021

SafeDirection
CRASH BARRIER SOLUTIONS

COPYRIGHT All rights reserved
These drawings, plans and specifications and the copyright therein are the properties of Safe Direction Pty Ltd, and must not be used, reproduced or copied wholly or in part without written permission.

ABN: 53 156 459 684

U.N.O: TOLARANCES: ± 1mm ALL DIMENSIONS ARE IN: mm

THIRD ANGLE PROJECTION

STATUS: APPROVED

TITLE:
Road Barriers - CrocGuard®
16m CrocGuard® to RamShield® W-Beam
General Arrangement

DWG NO.	REVISION:	SHEET SIZE
SD-RB-06000	A	A4

WEIGHT: 45400.7kg DO NOT SCALE DRAWING SCALE: 1:100 SHEET 4 of 4

C:\SDSYD\SD\Assembly\SD-RB Road Barriers\SD-RB-06000 CrocGuard\SD-RB-06000 - 16m CrocGuard to RamShield W-Beam\ Friday, 3 June 2022 7:45:21 AM