REVISIONS				
REV.	ZONE	DESCRIPTION	DATE	APPV'D
A		ORIGINAL ISSUE	14/10/2022	HW

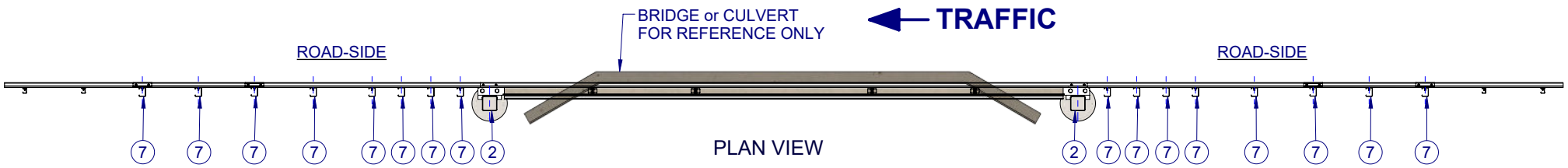

PLAN VIEW

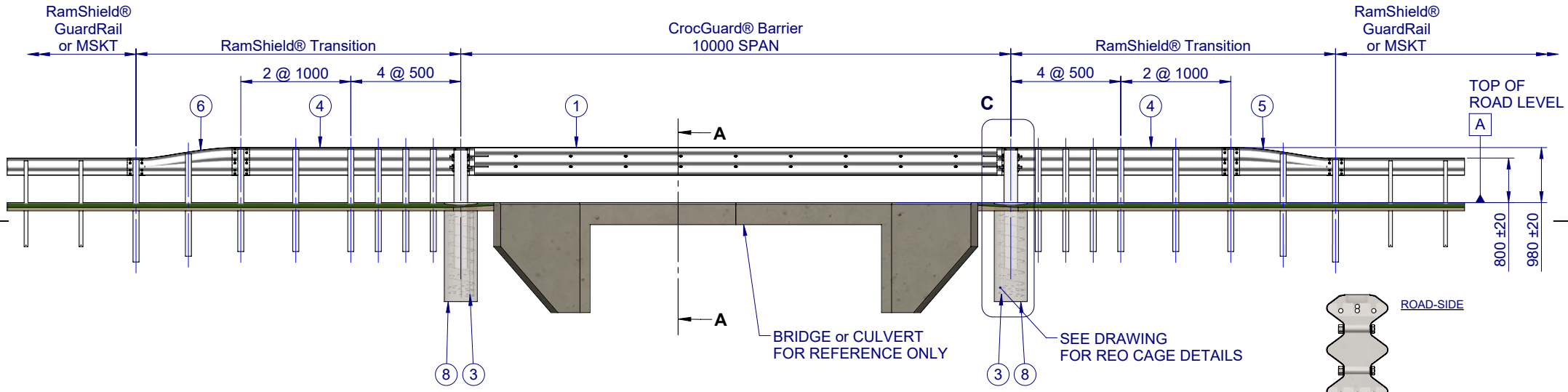

FRONT ELEVATION VIEW

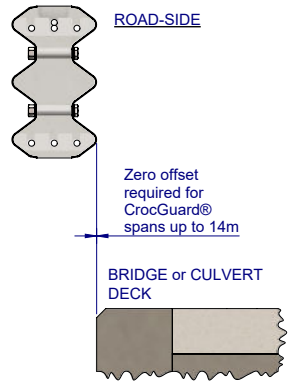

SECTION A-A
SCALE 1:25

BOM

ITEM NO.	QTY	PART NUMBER	DESCRIPTION	Weight kg
1	1	CG-TB-SR-1000-AG	CrocGuard® Beam 10m NLL	2524
2	2	CG-PG-SH-2150-AG	CrocGuard® Abutment Post	162
3	2	CG-RC-05-1400-AU	CrocGuard® Reinforcing Cage for Abutment Post	21
4	2	GE-TB-SR-4000-BG	Thrie-Beam Bridge Approach GuardRail 3.5mm BMT	86
5	1	GE-TB-SR-1905-AG	Assymetric Approach W-Beam to Thrie-Beam Transition	37
6	1	GE-TB-SR-1905-DG	Assymetric Departure Thrie-Beam to W-Beam Transition	37
7	16	GR-PG-CS-1860-AG	RamShield® High Containment Post 1860mm	24
8	2	SD-RB-06000-03	Concrete Footing 32 MPa (BY OTHERS)	1140
9	8	CG-FS-36-0100-HG	M36x100 Structural Hex Bolt/Nut/Washer, Class 8.8 HDG	0.3

MATERIAL:

FINISH: HOT-DIP GALVANISED AS/NZS 4680

STATUS	NAME	DATE
DRAWN	J. An	14/10/2022
CHK'D	T. Colquhoun	14/10/2022
APPV'D	H. Wallace	14/10/2022

SafeDirection
CRASH BARRIER SOLUTIONS

COPYRIGHT All rights reserved
These drawings, plans and specifications and the copyright therein are the properties of **Safe Direction Pty Ltd**, and must not be used, reproduced or copied wholly or in part without written permission.

ABN: 53 156 459 684

U.N.O. TOLARANCES: ± 1mm
ALL DIMENSIONS ARE IN: mm

THIRD ANGLE PROJECTION

STATUS: APPROVED

TITLE:
Road Barriers - CrocGuard®
10m CrocGuard® to RamShield® W-Beam
General Arrangement

DWG NO. SD-RB-06006
REVISION: A
SHEET SIZE: A4

WEIGHT:
DO NOT SCALE DRAWING
SCALE: 1:100
SHEET 1 of 4

C:\SDSYD\SD\Assembly\SD-RB Road Barriers\SD-RB-06000 CrocGuard\SD-RB-06006 - 10m CrocGuard to RamShield W-Beam, Monday, 17 October 2022 3:16:54 PM

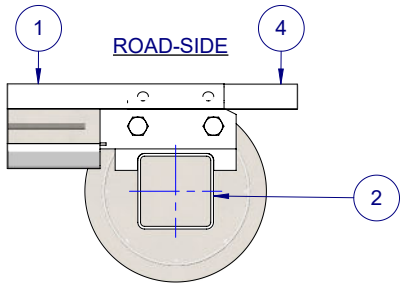

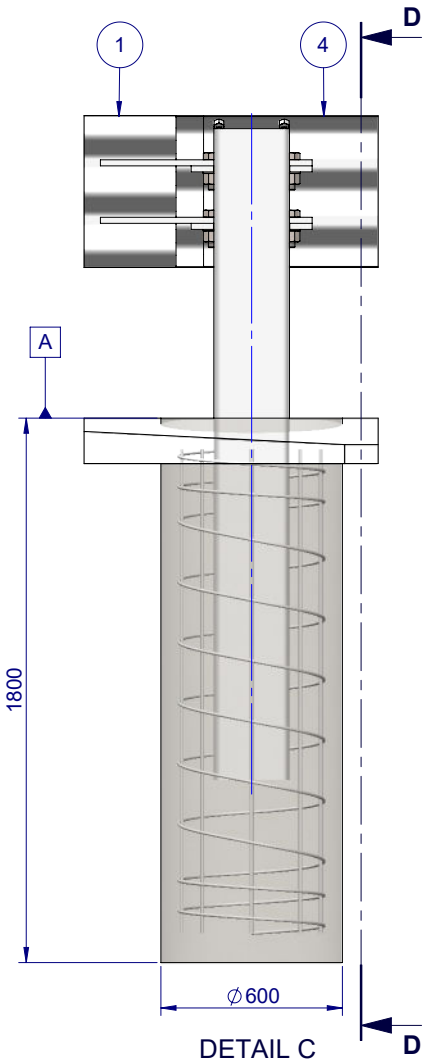

DETAIL C

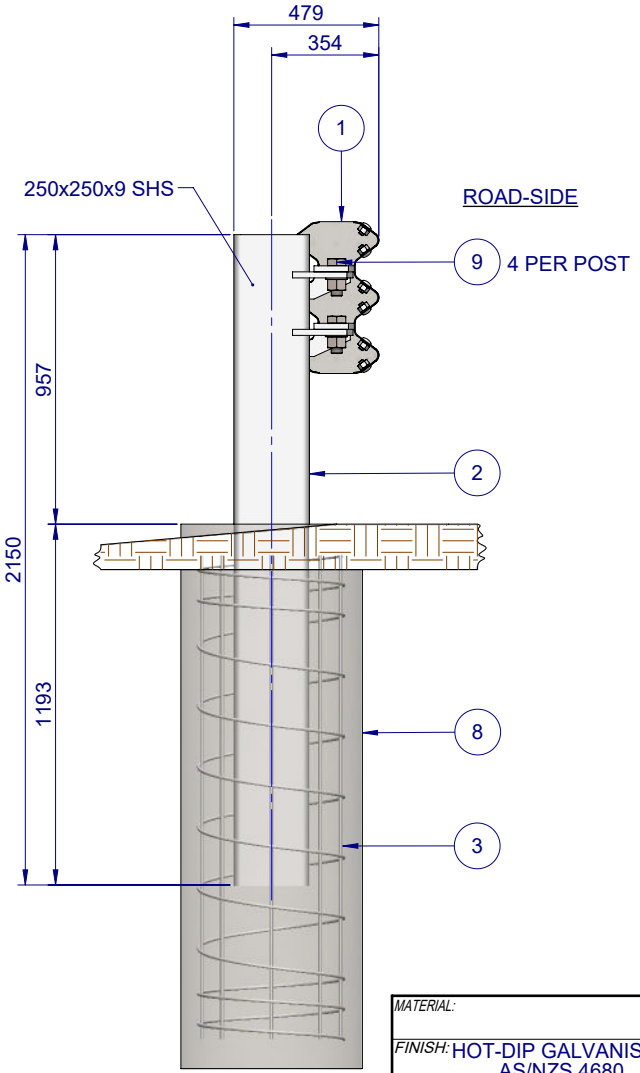

SECTION D-D

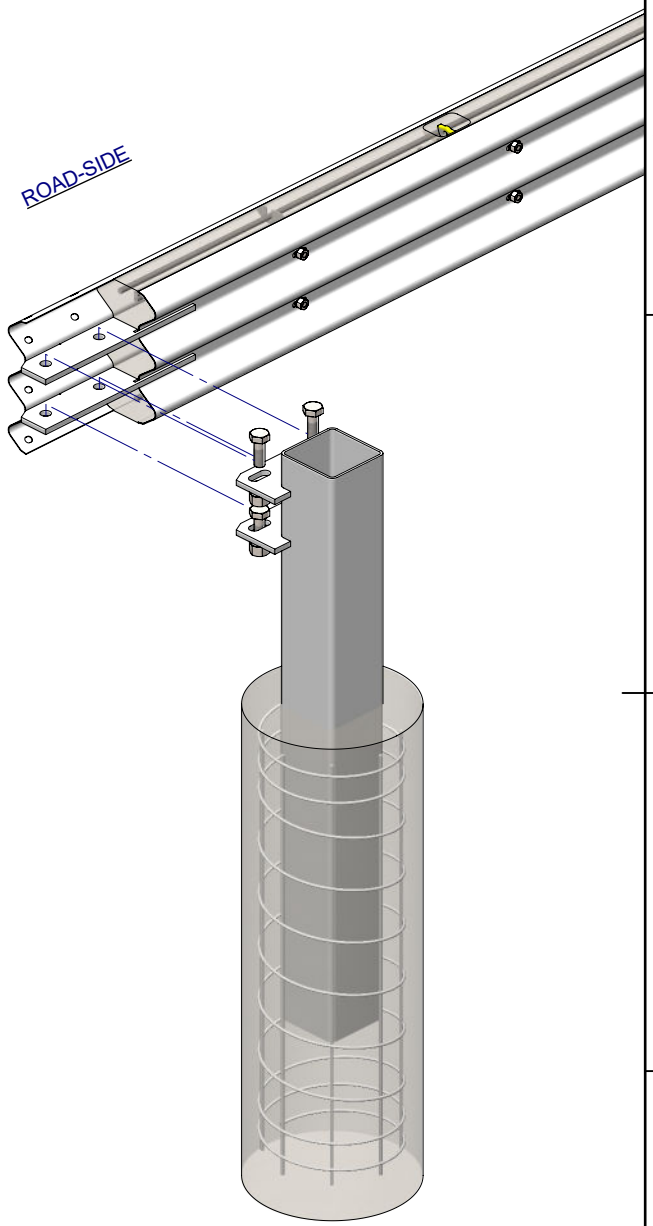

MATERIAL:		
FINISH:	HOT-DIP GALVANISED AS/NZS 4680	
STATUS	NAME	DATE
DRAWN	J. An	14/10/2022
CHK'D	T. Colquhoun	14/10/2022
APPV'D	H. Wallace	14/10/2022

SafeDirection
CRASH BARRIER SOLUTIONS

COPYRIGHT All rights reserved
These drawings, plans and specifications and the copyright therein are the properties of **Safe Direction Pty Ltd**, and must not be used, reproduced or copied wholly or in part without written permission.

ABN: 53 156 459 684

U.N.O. TOLARANCES: ± 1mm
ALL DIMENSIONS ARE IN: mm

THIRD ANGLE PROJECTION

STATUS: **APPROVED**

TITLE:
Road Barriers - CrocGuard®
10m CrocGuard® to RamShield® W-Beam
General Arrangement

DWG NO.	REVISION:	SHEET SIZE
SD-RB-06006	A	A4

WEIGHT: | DO NOT SCALE DRAWING | SCALE:1:25 | SHEET 2 of 4

C:\SDSYD\SD\Assembly\SD-RB Road Barriers\SD-RB-06000 CrocGuard\SD-RB-06006 - 10m CrocGuard to RamShield W-Beam, Monday, 17 October 2022 3:16:54 PM

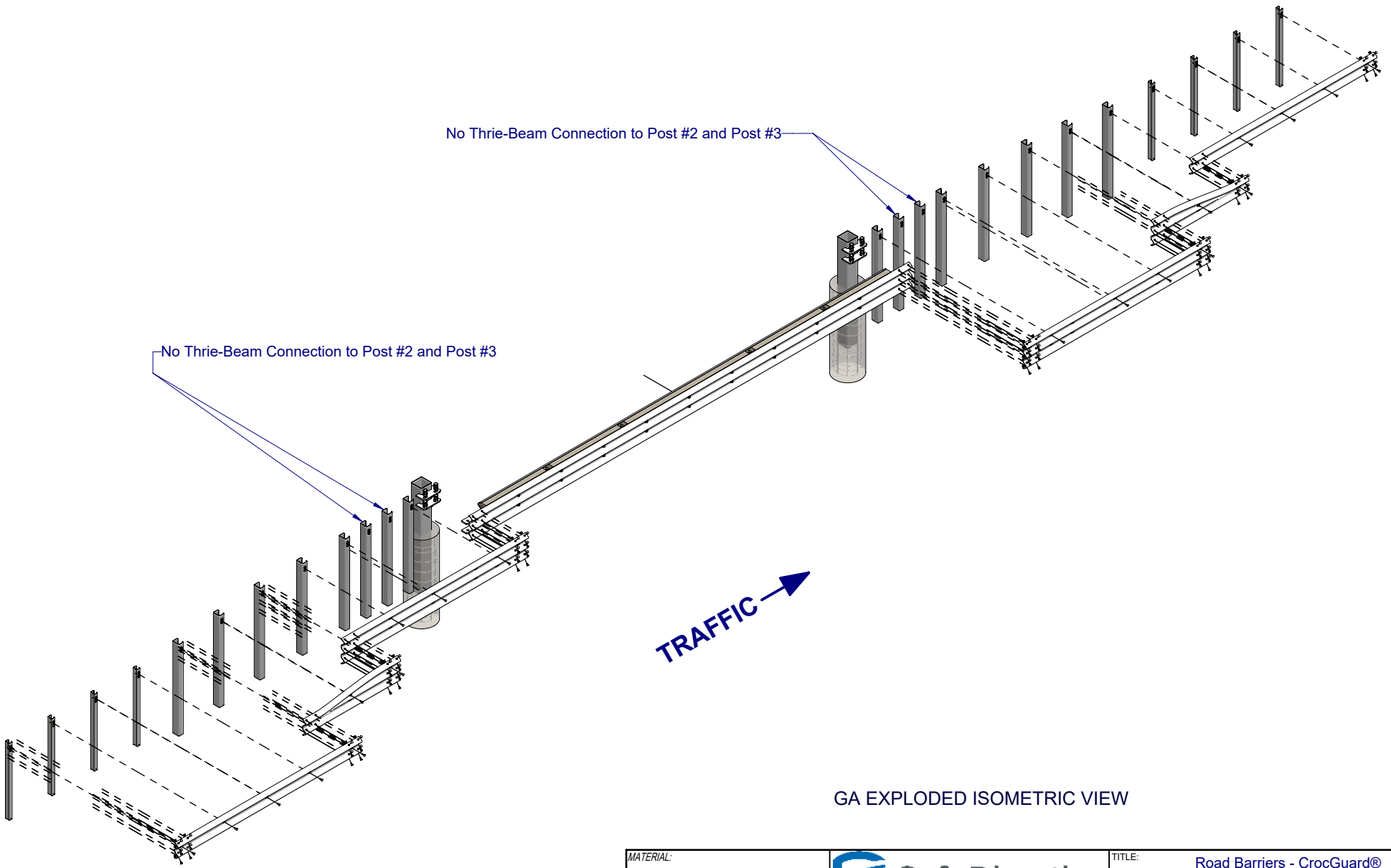

GA EXPLODED ISOMETRIC VIEW

MATERIAL:		
FINISH: HOT-DIP GALVANISED AS/NZS 4680		
STATUS	NAME	DATE
DRAWN	J. An	14/10/2022
CHK'D	T. Colquhoun	14/10/2022
APPV'D	H. Wallace	14/10/2022

SafeDirection
CRASH BARRIER SOLUTIONS

COPYRIGHT All rights reserved
These drawings, plans and specifications and the copyright therein are the properties of **Safe Direction Pty Ltd**, and must not be used, reproduced or copied wholly or in part without written permission.

ABN: 53 156 459 684

U.N.O. TOLARANCES: ± 1mm
ALL DIMENSIONS ARE IN: mm

THIRD ANGLE PROJECTION

STATUS: **APPROVED**

TITLE:
Road Barriers - CrocGuard®
10m CrocGuard® to RamShield® W-Beam
General Arrangement

DWG NO.	REVISION:	SHEET SIZE
SD-RB-06006	A	A4

WEIGHT: | DO NOT SCALE DRAWING | SCALE: 1:90 | SHEET 3 of 4

C:\SDSYD\SD\Assembly\SD-RB Road Barriers\SD-RB-06000 CrocGuard\SD-RB-06006 - 10m CrocGuard to RamShield W-Beam, Monday, 17 October 2022 3:16:54 PM

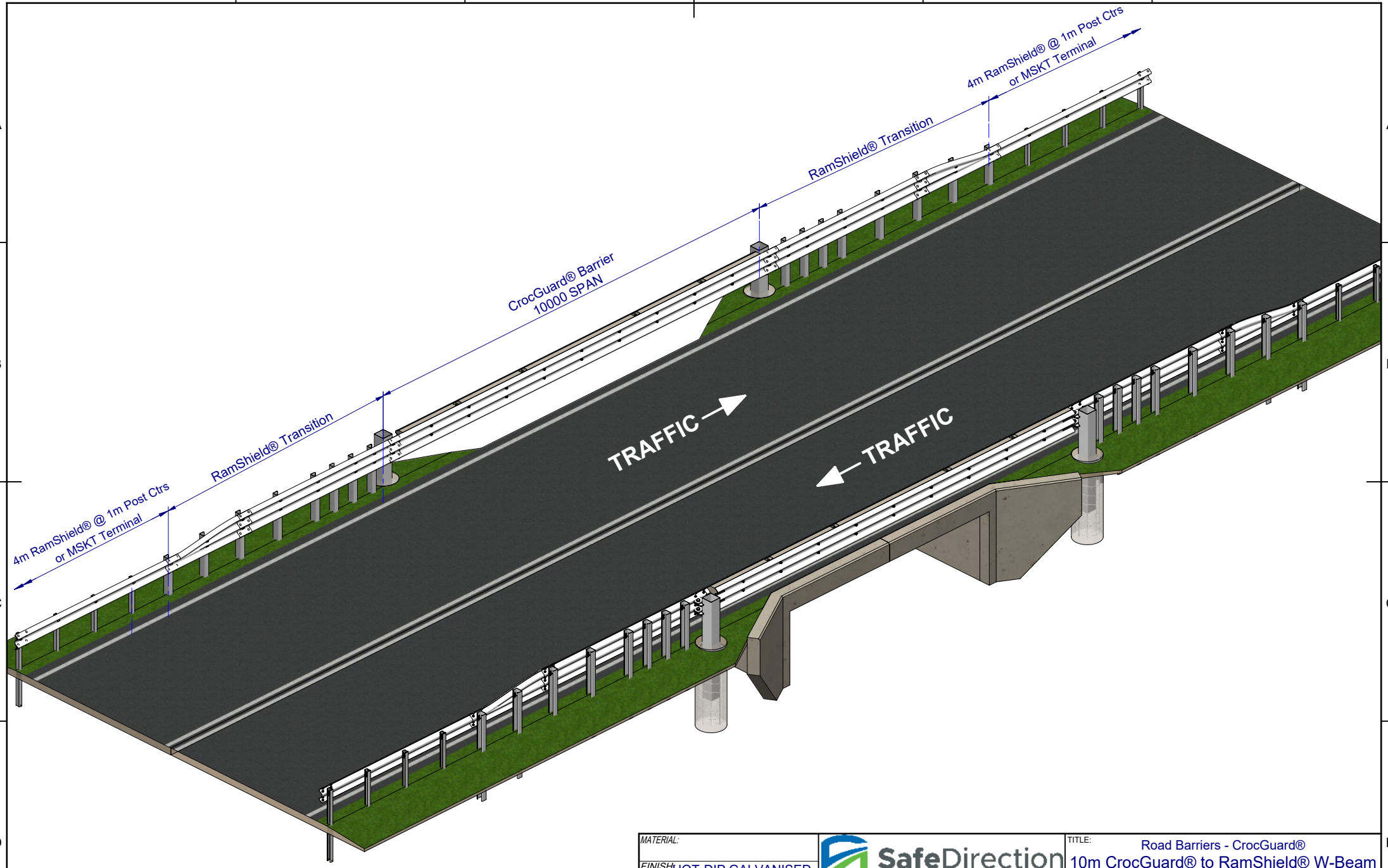

MATERIAL:		
FINISH	HOT-DIP GALVANISED AS/NZS 4680	
STATUS	NAME	DATE
DRAWN	J. An	14/10/2022
CHK'D	T. Colquhoun	14/10/2022
APPV'D	H. Wallace	14/10/2022

SafeDirection
CRASH BARRIER SOLUTIONS

COPYRIGHT All rights reserved
These drawings, plans and specifications and the copyright therein are the properties of **Safe Direction Pty Ltd**, and must not be used, reproduced or copied wholly or in part without written permission.

ABN: 53 156 459 684

U.N.O. TOLARANCES: ± 1mm
ALL DIMENSIONS ARE IN: mm

THIRD ANGLE PROJECTION

STATUS: **APPROVED**

TITLE:
Road Barriers - CrocGuard®
10m CrocGuard® to RamShield® W-Beam
General Arrangement

DWG NO.	REVISION:	SHEET SIZE
SD-RB-06006	A	A4

WEIGHT: | DO NOT SCALE DRAWING | SCALE:1:90 | SHEET 4 of 4

C:\SDSYD\SD\Assembly\SD-RB Road Barriers\SD-RB-06000 CrocGuard\SD-RB-06006 - 10m CrocGuard to RamShield W-Beam, Monday, 17 October 2022 3:16:54 PM