NOTES:
1. REFER TO SAFE DIRECTION DRAWING SD-RB-15001 FOR ASSEMBLY OF G4 W-BEAM WITH ROCKETBLOC.

**REVISIONS**

| REV. | ZONE | DESCRIPTION | DATE | APPV'D |
|---|---|---|---|---|
| A | | Initial Issue | 08/04/2024 | HW |
| B | | Revision Updated | 09/04/2025 | HW |

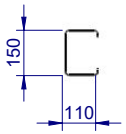


POST PLAN

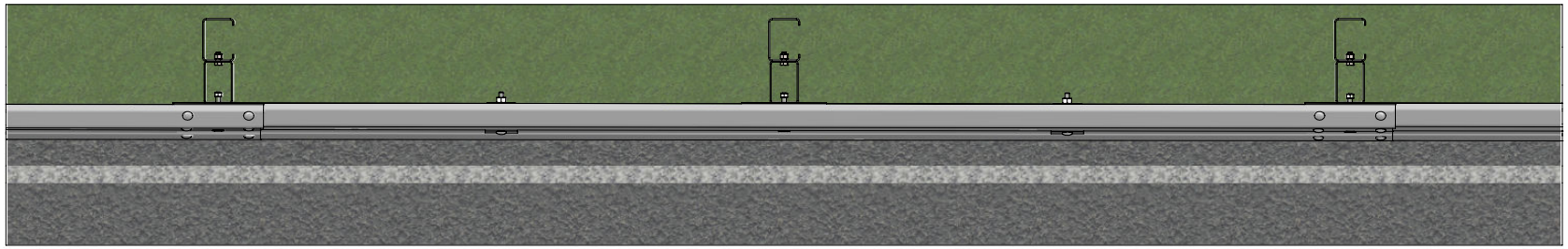

PLAN VIEW

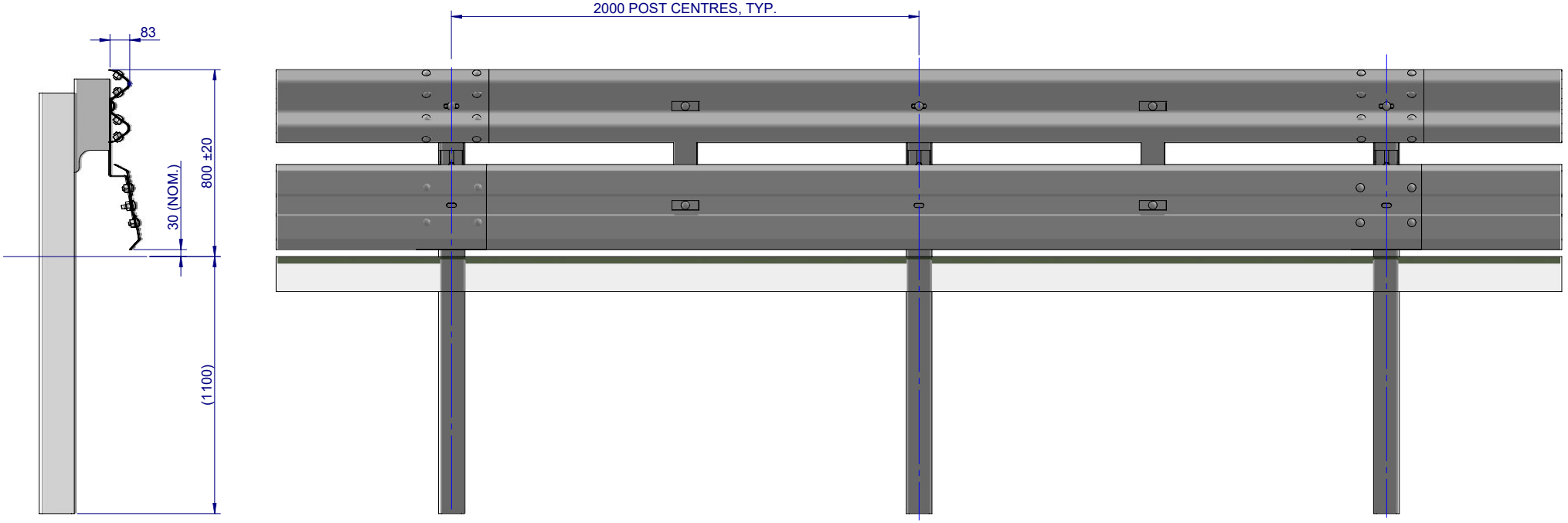


SIDE ELEVATION

FRONT ELEVATION

| Item No. | Part Number | Description |
|---|---|---|
| 1 | SD-RB-15001 | G4 W-Beam with RocketBloc, 2m Ctrs |
| 2 | GR-MP-BR-0586-AG | Biker-Shield Mounting Bracket |
| 3 | GR-MP-SR-4000-AG | Biker-Shield Beam, 4m NLL |
| 4 | GR-MP-FS-0000-AG | Plate Washer |
| 5 | GR-FS-16-0050-MZ | M16x50 Mushroom Head Post Bolt, Class 4.6 |
| 6 | GR-FS-16-0000-HG | M16 Hex Nut |
| 7 | GR-FS-16-0032-MG | M16x32 Mushroom Head Splice Bolt & Oversize Nut, Class 8.8 |
| 8 | GE-FS-20-0000-AG | M20 Washer HDG |

MATERIAL:
FINISH:

| STATUS | NAME | DATE |
|---|---|---|
| DRAWN | W. Refahi | 8/04/2024 |
| CHK'D | T. Colquhoun | 8/04/2024 |
| APPV'D | H. Wallace | 8/04/2024 |

SafeDirection
CRASH BARRIER SOLUTIONS

COPYRIGHT All rights reserved
These drawings, plans and specifications and the copyright therein are the properties of Safe Direction Pty Ltd, and must not be used, reproduced or copied wholly or in part without written permission.

ABN: 53 156 459 684

U.N.O: TOLARANCES: ± 1mm
ALL DIMENSIONS ARE IN: mm

THIRD ANGLE PROJECTION

STATUS: APPROVED

TITLE:
Road Barriers
G4 W-Beam with RocketBloc, 2m Ctrs, with Biker-Shield
General Arrangement

DWG NO. SD-RB-15007

REVISION: B

SHEET SIZE: A4

WEIGHT:

DO NOT SCALE DRAWING

SCALE: 1:25

SHEET 1 of 3

C:\Users\wesam.refahi\Documents\SDSYD\SD\Assembly\SD-RB Road Barriers\SD-RB-15000 G4 W-Beam with RocketBloc\SD-RB-15007 - G4 W-Beam with RocketBloc, 2m Ctrs, with Biker-Shield\ Wednesday, 9 April 2025 11:02:09 AM

NOTES:
1. REFER TO SAFE DIRECTION DRAWING SD-RB-15001 FOR ASSEMBLY OF G4 W-BEAM WITH ROCKETBLOC.

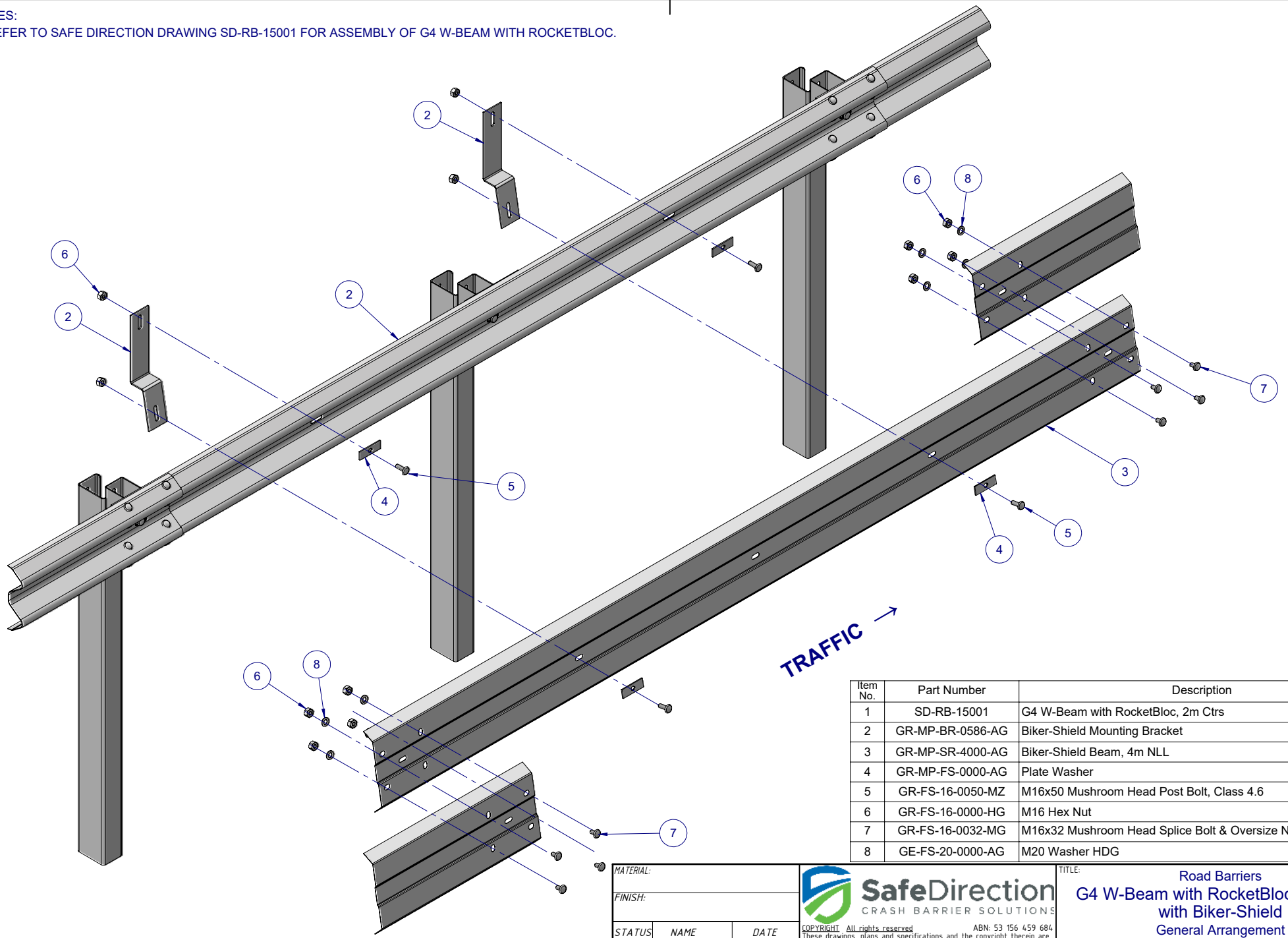


ISOMETRIC EXPLODED VIEW

| Item No. | Part Number | Description |
|---|---|---|
| 1 | SD-RB-15001 | G4 W-Beam with RocketBloc, 2m Ctrs |
| 2 | GR-MP-BR-0586-AG | Biker-Shield Mounting Bracket |
| 3 | GR-MP-SR-4000-AG | Biker-Shield Beam, 4m NLL |
| 4 | GR-MP-FS-0000-AG | Plate Washer |
| 5 | GR-FS-16-0050-MZ | M16x50 Mushroom Head Post Bolt, Class 4.6 |
| 6 | GR-FS-16-0000-HG | M16 Hex Nut |
| 7 | GR-FS-16-0032-MG | M16x32 Mushroom Head Splice Bolt & Oversize Nut, Class 8.8 |
| 8 | GE-FS-20-0000-AG | M20 Washer HDG |

MATERIAL:
FINISH:

| STATUS | NAME | DATE |
|---|---|---|
| DRAWN | W. Refahi | 8/04/2024 |
| CHK'D | T. Colquhoun | 8/04/2024 |
| APPV'D | H. Wallace | 8/04/2024 |

SafeDirection
CRASH BARRIER SOLUTIONS

COPYRIGHT All rights reserved
These drawings, plans and specifications and the copyright therein are the properties of Safe Direction Pty Ltd, and must not be used, reproduced or copied wholly or in part without written permission.

ABN: 53 156 459 684

U.N.O: TOLARANCES: ± 1mm
ALL DIMENSIONS ARE IN: mm

THIRD ANGLE PROJECTION

STATUS: APPROVED

TITLE:
Road Barriers
G4 W-Beam with RocketBloc, 2m Ctrs, with Biker-Shield
General Arrangement

DWG NO. SD-RB-15007
REVISION: B
SHEET SIZE: A4

WEIGHT:
DO NOT SCALE DRAWING
SCALE: 1:20
SHEET 2 of 3

C:\Users\wesam.refahi\Documents\SDSYD\SD\Assembly\SD-RB Road Barriers\SD-RB-15000 G4 W-Beam with RocketBloc\SD-RB-15007 - G4 W-Beam with RocketBloc, 2m Ctrs, with Biker-Shield\ Wednesday, 9 April 2025 11:02:09 AM

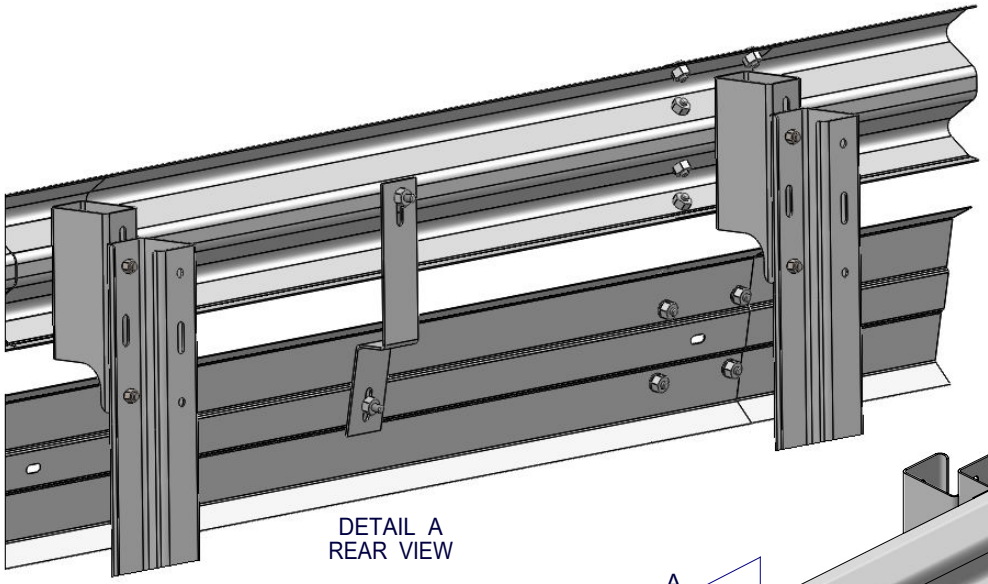

DETAIL A
REAR VIEW

A

ISOMETRIC VIEW

NOTES:
1. REFER TO SAFE DIRECTION DRAWING SD-RB-15001 FOR ASSEMBLY OF G4 W-BEAM WITH ROCKETBLOC.

| MATERIAL: | | |
|---|---|---|
| FINISH: | | |
| STATUS | NAME | DATE |
| DRAWN | W. Refahi | 8/04/2024 |
| CHK'D | T. Colquhoun | 8/04/2024 |
| APPV'D | H. Wallace | 8/04/2024 |

SafeDirection
CRASH BARRIER SOLUTIONS

COPYRIGHT All rights reserved
These drawings, plans and specifications and the copyright therein are the properties of Safe Direction Pty Ltd, and must not be used, reproduced or copied wholly or in part without written permission.

ABN: 53 156 459 684

U.N.O: TOLARANCES: ± 1mm
ALL DIMENSIONS ARE IN: mm

THIRD ANGLE PROJECTION

STATUS: APPROVED

TITLE:
Road Barriers
G4 W-Beam with RocketBloc, 2m Ctrs, with Biker-Shield
General Arrangement

| DWG NO. | REVISION: | SHEET SIZE |
|---|---|---|
| SD-RB-15007 | B | A4 |

WEIGHT: | DO NOT SCALE DRAWING | SCALE: 1:15 | SHEET 3 of 3

C:\Users\wesam.refahi\Documents\SDSYD\SD\Assembly\SD-RB Road Barriers\SD-RB-15000 G4 W-Beam with RocketBloc\SD-RB-15007 - G4 W-Beam with RocketBloc, 2m Ctrs, with Biker-Shield\ Wednesday, 9 April 2025 11:02:09 AM