NOTES:
1. REFER TO SAFE DIRECTION DRAWING SD-RB-15001 FOR ASSEMBLY OF G4 W-BEAM WITH ROCKETBLOC AND SD-RB-15007 FOR ASSEMBLY OF G4 W-BEAM WITH ROCKET BLOC, 2M CTRS, WITH BIKER-SHIELD.

REVISIONS

REV.	ZONE	DESCRIPTION	DATE	APPV'D
A		Original Issue	08/04/2024	HW
B		Revision Updated	09/04/2025	HW

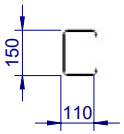

POST PLAN

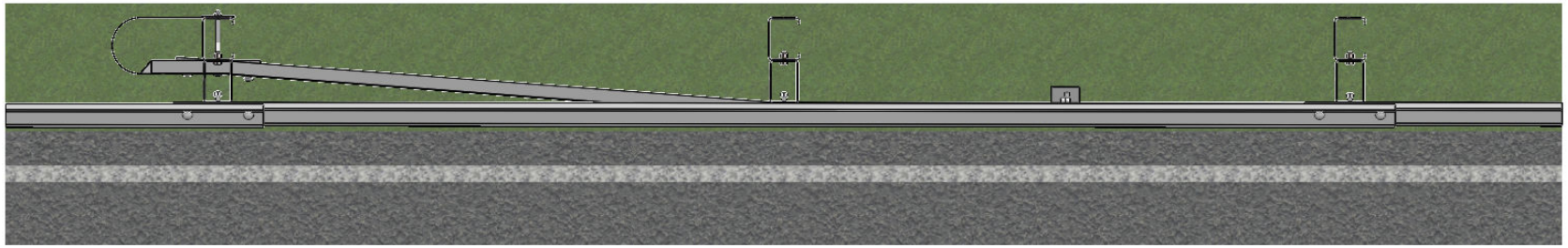

PLAN VIEW

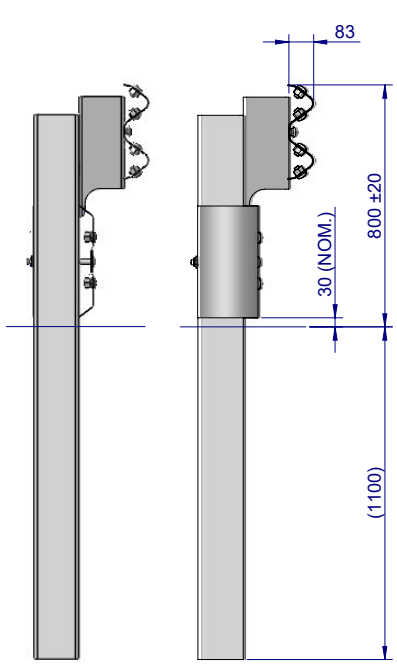

SECTION A-A SIDE ELEVATION

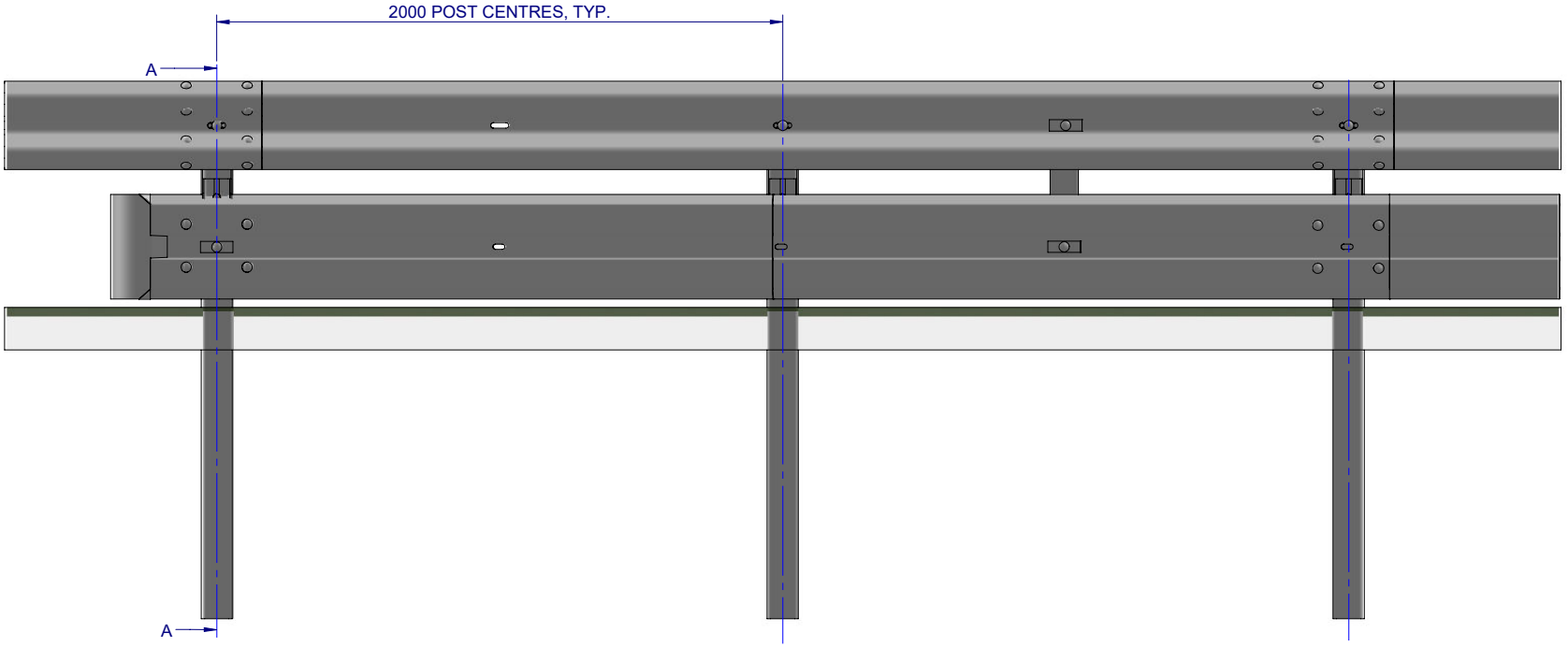

FRONT ELEVATION

Item No.	Part Number	Description
1	SD-RB-15007	G4 W-Beam with RocketBloc, 2m Ctrs, with Biker-Shield
2	GE-MP-EF-0150-AG	Biker-Shield™ Bullnose
3	GR-MP-FS-0000-AG	Plate Washer
4	GR-FS-16-0050-MZ	M16x50 Mushroom Head Post Bolt, Class 4.6
5	GR-FS-16-0000-HG	M16 Hex Nut
6	GE-FS-20-0000-HG	M20 Washer HDG
7	GR-FS-16-0220-MG	M16x220 Mushroom Head POST Bolt & Nut Assy Class 4.6 HDG

MATERIAL:
FINISH:

STATUS	NAME	DATE
DRAWN	W. Refahi	8/04/2024
CHK'D	T. Colquhoun	8/04/2024
APPV'D	H. Wallace	8/04/2024

SafeDirection
CRASH BARRIER SOLUTIONS

COPYRIGHT All rights reserved
These drawings, plans and specifications and the copyright therein are the properties of Safe Direction Pty Ltd, and must not be used, reproduced or copied wholly or in part without written permission.

ABN: 53 156 459 684

U.N.O: TOLARANCES: ± 1mm ALL DIMENSIONS ARE IN: mm
THIRD ANGLE PROJECTION

STATUS: APPROVED

TITLE:
Road Barriers
G4 W-Beam with RocketBloc, 2m Ctrs, with Biker-Shield Bullnose Assembly
General Arrangement

DWG NO. SD-RB-15008
REVISION: B
SHEET SIZE: A4
WEIGHT:
DO NOT SCALE DRAWING
SCALE: 1:25
SHEET 1 of 3

C:\Users\wesam.refahi\Documents\SDSYD\SD\Assembly\SD-RB Road Barriers\SD-RB-15000 G4 W-Beam with RocketBloc\SD-RB-15008 - G4 W-Beam with RocketBloc, 2m Ctrs, with Biker-Shield Bullnose Assembly\ Wednesday, 9 April 2025 11:19:05 AM

NOTES:
1. REFER TO SAFE DIRECTION DRAWING SD-RB-15001 FOR ASSEMBLY OF G4 W-BEAM WITH ROCKETBLOC AND SD-RB-15007 FOR ASSEMBLY OF G4 W-BEAM WITH ROCKET BLOC, 2M CTRS, WITH BIKER-SHIELD.

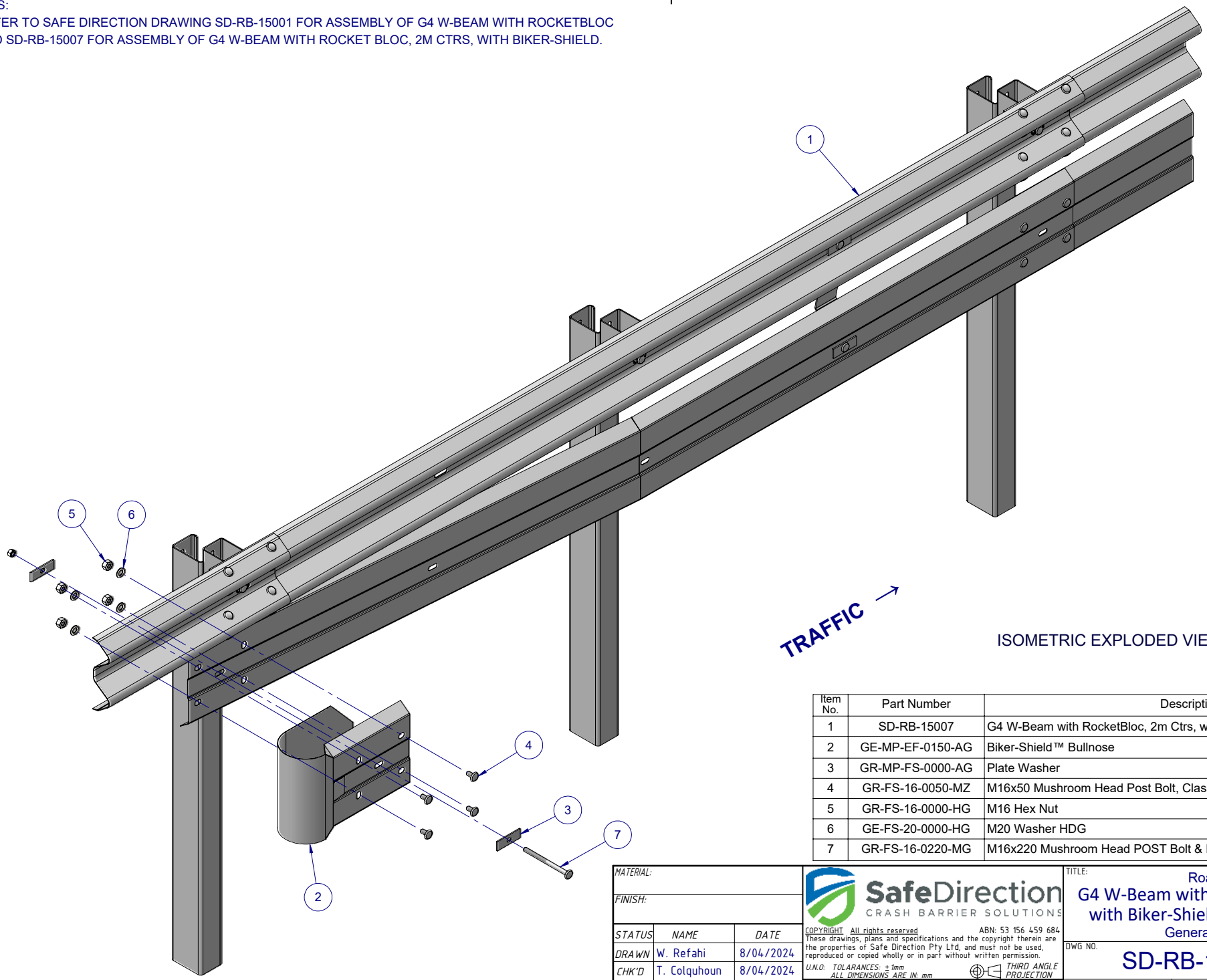

ISOMETRIC EXPLODED VIEW

Item No.	Part Number	Description
1	SD-RB-15007	G4 W-Beam with RocketBloc, 2m Ctrs, with Biker-Shield
2	GE-MP-EF-0150-AG	Biker-Shield™ Bullnose
3	GR-MP-FS-0000-AG	Plate Washer
4	GR-FS-16-0050-MZ	M16x50 Mushroom Head Post Bolt, Class 4.6
5	GR-FS-16-0000-HG	M16 Hex Nut
6	GE-FS-20-0000-HG	M20 Washer HDG
7	GR-FS-16-0220-MG	M16x220 Mushroom Head POST Bolt & Nut Assy Class 4.6 HDG

MATERIAL:
FINISH:

STATUS	NAME	DATE
DRAWN	W. Refahi	8/04/2024
CHK'D	T. Colquhoun	8/04/2024
APPV'D	H. Wallace	8/04/2024

SafeDirection
CRASH BARRIER SOLUTIONS

COPYRIGHT All rights reserved
These drawings, plans and specifications and the copyright therein are the properties of Safe Direction Pty Ltd, and must not be used, reproduced or copied wholly or in part without written permission.

ABN: 53 156 459 684

U.N.O: TOLARANCES: ± 1mm
ALL DIMENSIONS ARE IN: mm
THIRD ANGLE PROJECTION

STATUS: APPROVED

TITLE:
Road Barriers
G4 W-Beam with RocketBloc, 2m Ctrs, with Biker-Shield Bullnose Assembly
General Arrangement

DWG NO. SD-RB-15008
REVISION: B
SHEET SIZE: A4

WEIGHT:
DO NOT SCALE DRAWING
SCALE: 1:20
SHEET 2 of 3

C:\Users\wesam.refahi\Documents\SDSYD\SD\Assembly\SD-RB Road Barriers\SD-RB-15000 G4 W-Beam with RocketBloc\SD-RB-15008 - G4 W-Beam with RocketBloc, 2m Ctrs, with Biker-Shield Bullnose Assembly\ Wednesday, 9 April 2025 11:19:05 AM

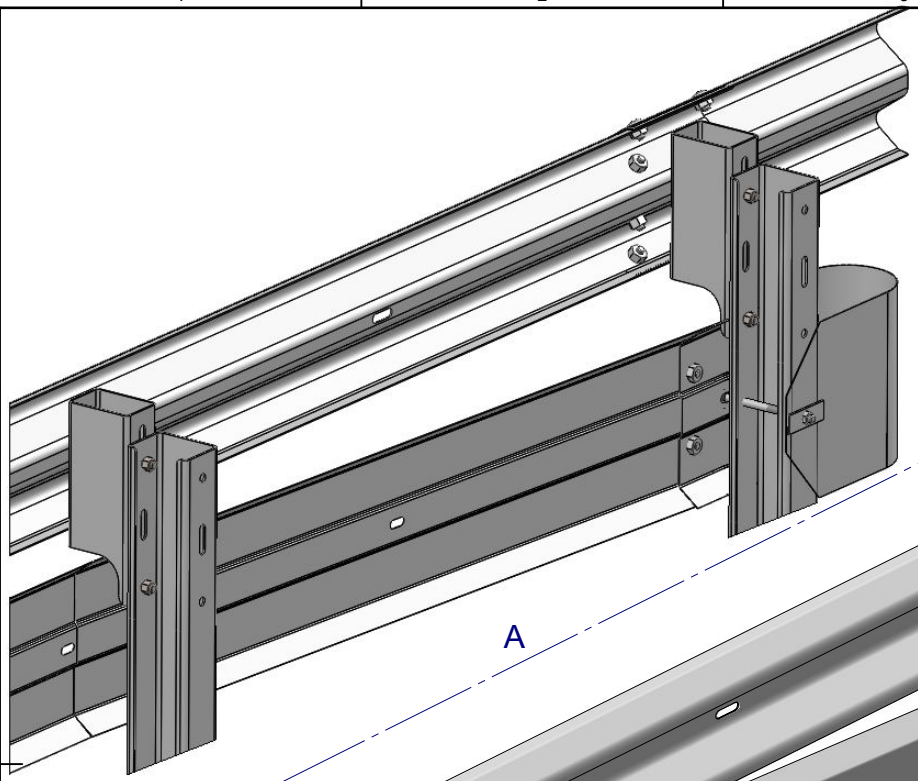

DETAIL A
REAR VIEW

A

ISOMETRIC VIEW

NOTES:
1. REFER TO SAFE DIRECTION DRAWING SD-RB-15001 FOR ASSEMBLY OF G4 W-BEAM WITH ROCKETBLOC AND SD-RB-15007 FOR ASSEMBLY OF G4 W-BEAM WITH ROCKET BLOC, 2M CTRS, WITH BIKER-SHIELD.

MATERIAL:		
FINISH:		
STATUS	NAME	DATE
DRAWN	W. Refahi	8/04/2024
CHK'D	T. Colquhoun	8/04/2024
APPV'D	H. Wallace	8/04/2024

SafeDirection
CRASH BARRIER SOLUTIONS

COPYRIGHT All rights reserved
These drawings, plans and specifications and the copyright therein are the properties of Safe Direction Pty Ltd, and must not be used, reproduced or copied wholly or in part without written permission.

ABN: 53 156 459 684

U.N.O: TOLARANCES: ± 1mm
ALL DIMENSIONS ARE IN: mm

THIRD ANGLE PROJECTION

STATUS: APPROVED

TITLE:
Road Barriers
G4 W-Beam with RocketBloc, 2m Ctrs, with Biker-Shield Bullnose Assembly
General Arrangement

DWG NO.	REVISION:	SHEET SIZE
SD-RB-15008	B	A4

WEIGHT: | DO NOT SCALE DRAWING | SCALE: 1:15 | SHEET 3 of 3

C:\Users\wesam.refahi\Documents\SDSYD\SD\Assembly\SD-RB Road Barriers\SD-RB-15000 G4 W-Beam with RocketBloc\SD-RB-15008 - G4 W-Beam with RocketBloc, 2m Ctrs, with Biker-Shield Bullnose Assembly\... Wednesday, 9 April 2025 11:19:05 AM